205-02 2-jaw puller with oscillating, height-adjustable jaws, up to 250 mm spread, 220 mm reach



DESCRIPTION

The heavy, 2-jaw puller with oscillating and height-adjustable jaws is used for the central extraction of large bearings, gears, and discs in all common sizes for crafts, workshops, and industry. This allows for loosening any component that is mounted on a shaft and accessible from the outside. The oscillating jaws adapt to any installation situation and can be universally used due to the adjustable reach. Depending on the version, the claw shape varies.

APPLICATION AREA

For central removal of large bearings, gears, and discs in all common sizes for craft, workshop, and industry.

BENEFIT

- Adjustable puller jaws for individual adaptation of the reach.
- Oscillating puller jaws offer a variety of adjustment options
- Claw end with slot provides support for screw for additional support when pulling off
- Safe installation of the spindle using a rotatable spindle tip on both smooth surfaces and during centering (Switch Technology)
- Spindle extension for the protection of the thread

MASTER DATA

GTIN [GTIN]	4021176028731
Country of origin	DE
Material	Tool steel
Series	205
Gross weight [kg]	2,545 kg
Package contents	1 piece
Packaging Act	PAPPE PAP 21
Worldwide sales capability	Yes (REACH, RoHS, POP, PROP65, TSCA)

SPARE PARTS

- 201-2-T_Crossbar
- 205-02-220-P_2 puller jaws with adjustable reach (pair)
- 620260_Two-sided spindle tip
- 621220_Mechanical pressure spindle

APPLICATION IMAGE



2-jaw puller with oscillating, height-adjustable jaws, up to 250 mm spread, 220 mm reach

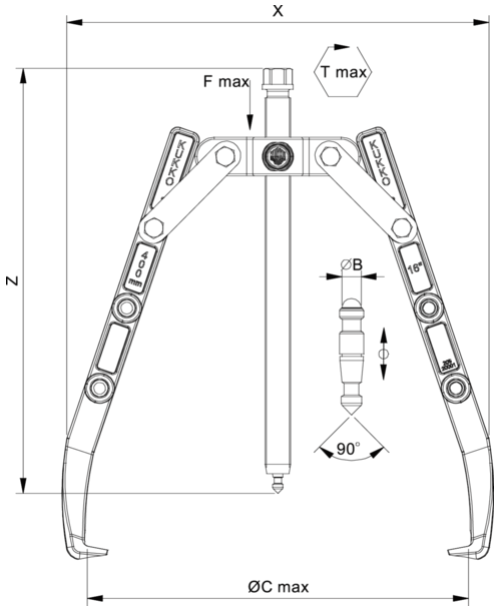

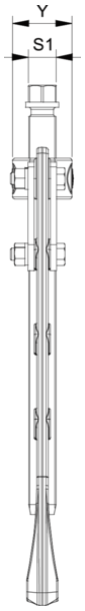

Abbreviation	Attribut	Wert
X	Total width [mm]	320 mm
Y	Total depth [mm]	42 mm
Z	Total height [mm]	245 mm
A	Clamping depth of external puller [mm]	220 mm
S1	Width across flats [mm]	22 mm
Cmin	Span outside pull-off (min.) [mm]	0 mm
Cmax	Span outside pull-off (max.) [mm]	250 mm
K	Hook root thickness at the tip (claw thickness K) [mm]	4 mm
J	Hook base width (claw width J) [mm]	24 mm
O	Hook base depth usable (claw depth usable O) [mm]	15 mm
H	Total hook root depth (total claw depth H) [mm]	50 mm
L	Total claw thickness (L+1mm) [mm]: (claw distance to base surface)	18 mm
Tmax	Max. torque [Nm]	150 Nm
Fmax	Max. tractive force [t]	7 t
Fmax	Max. tensile force [kN]	70 kN

Abbreviation	Attribut	Wert
X	Total width [mm]	320 mm
Y	Total depth [mm]	42 mm
Z	Total height [mm]	245 mm
A	Clamping depth of external puller [mm]	220 mm
S1	Width across flats [mm]	22 mm
Cmin	Span outside pull-off (min.) [mm]	0 mm
Cmax	Span outside pull-off (max.) [mm]	250 mm
K	Hook root thickness at the tip (claw thickness K) [mm]	4 mm
J	Hook base width (claw width J) [mm]	24 mm
O	Hook base depth usable (claw depth usable O) [mm]	15 mm
H	Total hook root depth (total claw depth H) [mm]	50 mm
L	Total claw thickness (L+1mm) [mm]: (claw distance to base surface)	18 mm
Tmax	Max. torque [Nm]	150 Nm
Fmax	Max. tractive force [t]	7 t
Fmax	Max. tensile force [kN]	70 kN

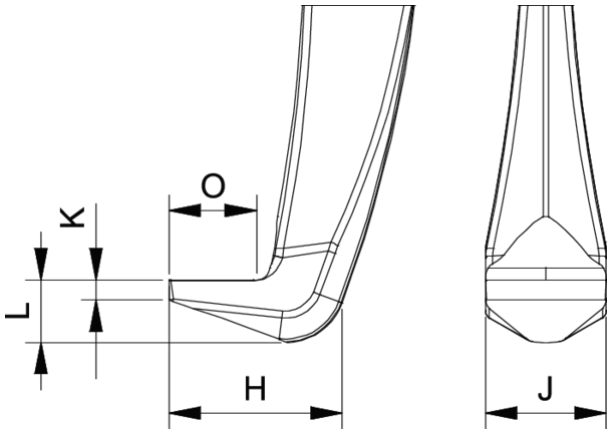

Abbreviation	Attribut	Wert
X	Total width [mm]	320 mm
Y	Total depth [mm]	42 mm
Z	Total height [mm]	245 mm
A	Clamping depth of external puller [mm]	220 mm
S1	Width across flats [mm]	22 mm

Cmin	Span outside pull-off (min.) [mm]	0 mm
Cmax	Span outside pull-off (max.) [mm]	250 mm
K	Hook root thickness at the tip (claw thickness K) [mm]	4 mm
J	Hook base width (claw width J) [mm]	24 mm
O	Hook base depth usable (claw depth usable O) [mm]	15 mm
H	Total hook root depth (total claw depth H) [mm]	50 mm
L	Total claw thickness (L+1mm) [mm]: (claw distance to base surface)	18 mm
Tmax	Max. torque [Nm]	150 Nm
Fmax	Max. tractive force [t]	7 t
Fmax	Max. tensile force [kN]	70 kN

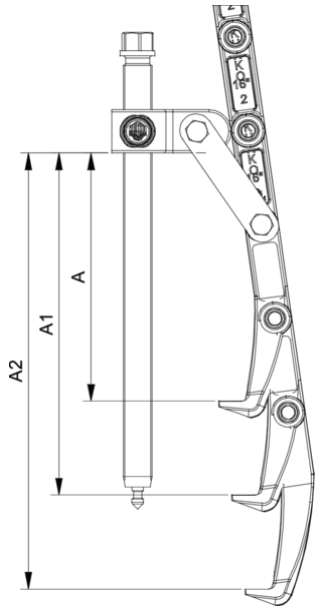

Abbreviation	Attribut	Wert
X	Total width [mm]	320 mm
Y	Total depth [mm]	42 mm
Z	Total height [mm]	245 mm
A	Clamping depth of external puller [mm]	220 mm
S1	Width across flats [mm]	22 mm
Cmin	Span outside pull-off (min.) [mm]	0 mm
Cmax	Span outside pull-off (max.) [mm]	250 mm
K	Hook root thickness at the tip (claw thickness K) [mm]	4 mm
J	Hook base width (claw width J) [mm]	24 mm
O	Hook base depth usable (claw depth usable O) [mm]	15 mm
H	Total hook root depth (total claw depth H) [mm]	50 mm
L	Total claw thickness (L+1mm) [mm]: (claw distance to base surface)	18 mm
Tmax	Max. torque [Nm]	150 Nm
Fmax	Max. tractive force [t]	7 t
Fmax	Max. tensile force [kN]	70 kN