220-2 2-jaw puller with conical self-centering, up to 150 mm spread, 170 mm reach



DESCRIPTION

The 2-jaw pullers with conical self-tensioning are used for the concentric removal of bearings, gears, and discs in all common sizes for crafts, workshops, and industry. This allows any component seated on a shaft and freely accessible from the outside to be released. By tightening the tension cone, the puller jaws are automatically centered. The desired span can be adjusted by operating the tension cone. Additionally, the puller jaws can be pre-tensioned using the cone to prevent possible slipping. Usable as both external extractor and internal extractor (in combination with a sliding hammer or counter stay) by simply reversing the puller jaws and tension cone.

BENEFIT

- Self-centering of the jaws by tightening the tension cone
- The clamping cone regulates the setting of the desired reach.
- Optional convertible from an external puller to an internal extractor by reversing the puller jaws and the tension cone.

MASTER DATA

GTIN [GTIN]	4021176080135
Country of origin	DE
Material	Tool steel
Series	220
Gross weight [kg]	2,45 kg
Package contents	1 piece
Packaging Act	Rezykkat rHDPE 61
Worldwide sales capability	Yes (REACH, RoHS, POP, PROP65, TSCA)

SPARE PARTS

- 220-1-33_Clamping cone for BR 220 & 221
- 220-1-T_Crossbar
- 220-2-165-P_2 jaws (pair)
- 621220_Mechanical pressure spindle

APPLICATION IMAGE



DETAIL IMAGE



2-jaw puller with conical self-centering, up to 150 mm spread, 170 mm reach

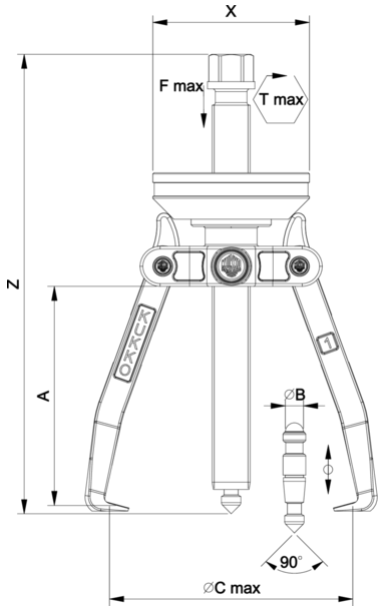

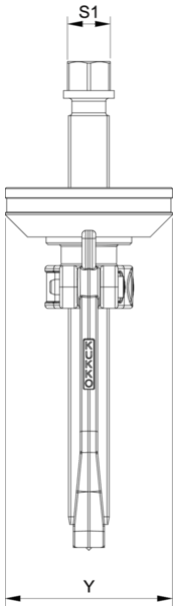

Abbreviation	Attribut	Wert
X	Total width [mm]	100 mm
Y	Total depth [mm]	86 mm
Z	Total height [mm]	250 mm
A	Clamping depth of external puller [mm]	170 mm
S1	Width across flats [mm]	22 mm
Cmin	Span outside pull-off (min.) [mm]	0 mm
Cmax	Span outside pull-off (max.) [mm]	150 mm
K	Hook root thickness at the tip (claw thickness K) [mm]	2 mm
J	Hook base width (claw width J) [mm]	16 mm
O	Hook base depth usable (claw depth usable O) [mm]	14 mm
H	Total hook root depth (total claw depth H) [mm]	24 mm
L	Total claw thickness (L+1mm) [mm]: (claw distance to base surface)	8 mm
Emin	Span inside pull-out (min.) [mm]	60 mm
Emax	Span inside pull-out (max.) [mm]	180 mm
Tmax	Max. torque [Nm]	120 Nm
Fmax	Max. tractive force [t]	5 t
Fmax	Max. tensile force [kN]	50 kN

Abbreviation	Attribut	Wert
X	Total width [mm]	100 mm
Y	Total depth [mm]	86 mm
Z	Total height [mm]	250 mm
A	Clamping depth of external puller [mm]	170 mm
S1	Width across flats [mm]	22 mm
Cmin	Span outside pull-off (min.) [mm]	0 mm
Cmax	Span outside pull-off (max.) [mm]	150 mm
K	Hook root thickness at the tip (claw thickness K) [mm]	2 mm
J	Hook base width (claw width J) [mm]	16 mm
O	Hook base depth usable (claw depth usable O) [mm]	14 mm
H	Total hook root depth (total claw depth H) [mm]	24 mm
L	Total claw thickness (L+1mm) [mm]: (claw distance to base surface)	8 mm
Emin	Span inside pull-out (min.) [mm]	60 mm
Emax	Span inside pull-out (max.) [mm]	180 mm
Tmax	Max. torque [Nm]	120 Nm
Fmax	Max. tractive force [t]	5 t
Fmax	Max. tensile force [kN]	50 kN

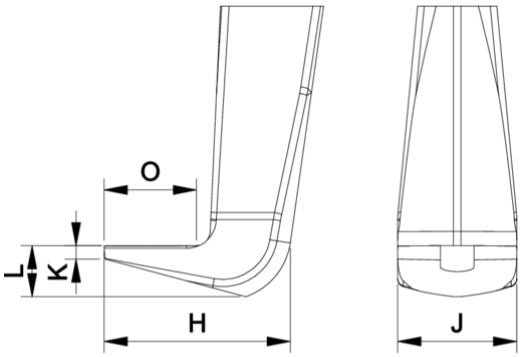

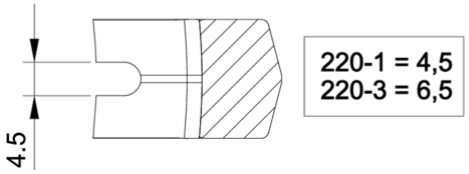

Abbreviation	Attribut	Wert
X	Total width [mm]	100 mm
Y	Total depth [mm]	86 mm
Z	Total height [mm]	250 mm
A	Clamping depth of external puller [mm]	170 mm
S1	Width across flats [mm]	22 mm
Cmin	Span outside pull-off (min.) [mm]	0 mm
Cmax	Span outside pull-off (max.) [mm]	150 mm
K	Hook root thickness at the tip (claw thickness K) [mm]	2 mm
J	Hook base width (claw width J) [mm]	16 mm
O	Hook base depth usable (claw depth usable O) [mm]	14 mm
H	Total hook root depth (total claw depth H) [mm]	24 mm
L	Total claw thickness (L+1mm) [mm]: (claw distance to base surface)	8 mm
Emin	Span inside pull-out (min.) [mm]	60 mm
Emax	Span inside pull-out (max.) [mm]	180 mm
Tmax	Max. torque [Nm]	120 Nm
Fmax	Max. tractive force [t]	5 t
Fmax	Max. tensile force [kN]	50 kN