# 30-20+ 3-jaw universal puller with quick adjustment jaws, up to 200 mm spread, 150 mm reach



## APPLICATION IMAGE



## DESCRIPTION

The 3-jaw universal puller with quickly adjustable jaws is used for pulling bearings, gears, and discs in all common sizes for craft, workshop, and industry. It allows for loosening any component that sits on a shaft and is freely accessible from the outside. Equipped with robust standard jaws and practical hand knobs, the puller all-rounder ensures a particularly safe, user-friendly, and non-destructive disassembly both for external extraction and internal extraction. The 3-jaw design guarantees an even load distribution and thus a particularly secure grip on the part being pulled.

## APPLICATION AREA

To detach bearings, gears, and discs in all common sizes for crafts, workshops, and industry.

## BENEFIT

- Simple manual release of the jaws using hand knobs (Quick Adjust Technology)
- 3-jaw ensures an even distribution of force and allows for greater pulling forces.
- Application also for eccentric components through freely movable, sliding puller jaws on the crossbar.
- Hexagonal profile on the crossbar for secure counterholding
- Quick-adjustable jaws guarantee immediate adjustment to any spread between 0 mm – 200 mm
- Anti-slip safety (spindle neck) suspension of the claw in the sliding piece (Armlock Technology)
- Secure installation of the spindle with rotatable spindle tip on both smooth surfaces and in centering (Switch Technology)
- Optional convertible from an external puller to an internal puller by reversing the jaws.
- Anti-slip safety (spindle neck) at the spindle head for safe work with the wrench
- Spindle outlet to protect the thread
- Jaws, spindle, and crossbar have a spare part number for easy reordering.
- Pullers are labeled with technical attributes and manufacturer information (label)

## OPERATION

- Position the puller jaws externally onto the part to be pulled off
- Slide the claws under the component
- Use the hand knob for manual fastening of the jaws
- Manually pull the spindle for fixation
- Set the hexagon on the spindle head in motion with a ratchet or a wrench until the component is loosened

## MASTER DATA

| | |
|---|---|
| GTIN [GTIN] | 4021176731716 |
| Country of origin | DE |
| Material | Tool steel |
| Series | 30+ |
| Gross weight [kg] | 4,08 kg |
| Package contents | 1 piece |
| Packaging Act | PAPPE PAP 21 |
| Worldwide sales capability | Yes (REACH, RoHS, POP, PROP65, TSCA) |

## SPARE PARTS

- 2-152-S_3 quick-adjustable standard puller hooks (set)
- 30-20-T3_Crossbar
- 620260_Two-sided spindle tip
- 621220_Mechanical pressure spindle

# 3-jaw universal puller with quick adjustment jaws, up to 200 mm spread, 150 mm reach

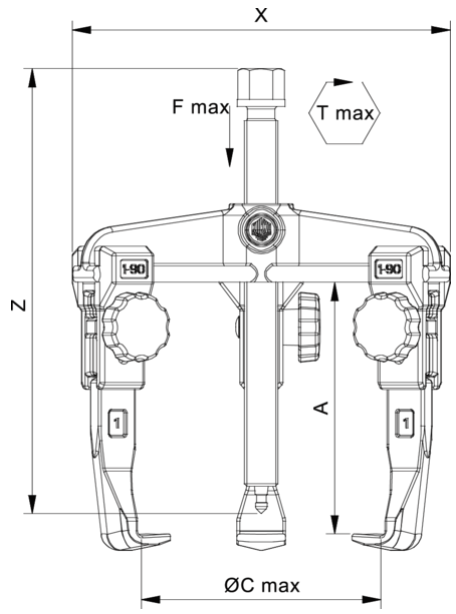


| Abbreviation | Attribut | Wert |
|---|---|---|
| X | Total width [mm] | 260 mm |
| Y | Total depth [mm] | 260 mm |
| Z | Total height [mm] | 254 mm |
| A | Clamping depth of external puller [mm] | 150 mm |
| S1 | Width across flats [mm] | 22 mm |
| Cmin | Span outside pull-off (min.) [mm] | 0 mm |
| Cmax | Span outside pull-off (max.) [mm] | 200 mm |
| K | Hook root thickness at the tip (claw thickness K) [mm] | 5 mm |
| J | Hook base width (claw width J) [mm] | 24 mm |
| O | Hook base depth usable (claw depth usable O) [mm] | 18 mm |
| H | Total hook root depth (total claw depth H) [mm] | 40 mm |
| L | Total claw thickness (L+1mm) [mm]: (claw distance to base surface) | 9 mm |
| Emin | Span inside pull-out (min.) [mm] | 100 mm |
| Emax | Span inside pull-out (max.) [mm] | 260 mm |
| Tmax | Max. torque [Nm] | 150 Nm |
| Fmax | Max. tractive force [t] | 7 t |
| Fmax | Max. tensile force [kN] | 70 kN |

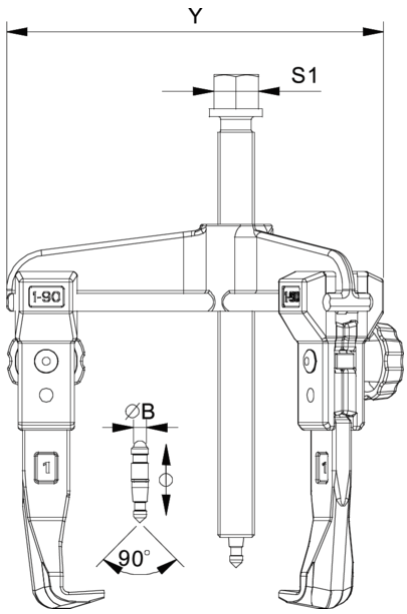


| Abbreviation | Attribut | Wert |
|---|---|---|
| X | Total width [mm] | 260 mm |
| Y | Total depth [mm] | 260 mm |
| Z | Total height [mm] | 254 mm |
| A | Clamping depth of external puller [mm] | 150 mm |
| S1 | Width across flats [mm] | 22 mm |
| Cmin | Span outside pull-off (min.) [mm] | 0 mm |
| Cmax | Span outside pull-off (max.) [mm] | 200 mm |
| K | Hook root thickness at the tip (claw thickness K) [mm] | 5 mm |
| J | Hook base width (claw width J) [mm] | 24 mm |
| O | Hook base depth usable (claw depth usable O) [mm] | 18 mm |
| H | Total hook root depth (total claw depth H) [mm] | 40 mm |
| L | Total claw thickness (L+1mm) [mm]: (claw distance to base surface) | 9 mm |
| Emin | Span inside pull-out (min.) [mm] | 100 mm |
| Emax | Span inside pull-out (max.) [mm] | 260 mm |
| Tmax | Max. torque [Nm] | 150 Nm |
| Fmax | Max. tractive force [t] | 7 t |
| Fmax | Max. tensile force [kN] | 70 kN |

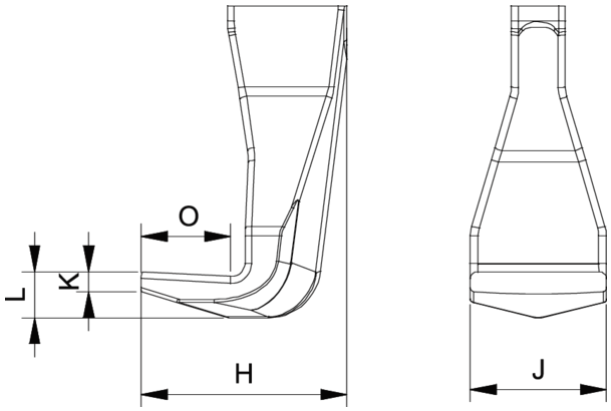


| Abbreviation | Attribut | Wert |
|---|---|---|
| X | Total width [mm] | 260 mm |
| Y | Total depth [mm] | 260 mm |
| Z | Total height [mm] | 254 mm |
| A | Clamping depth of external puller [mm] | 150 mm |

| | | |
|---|---|---|
| S1 | Width across flats [mm] | 22 mm |
| Cmin | Span outside pull-off (min.) [mm] | 0 mm |
| Cmax | Span outside pull-off (max.) [mm] | 200 mm |
| K | Hook root thickness at the tip (claw thickness K) [mm] | 5 mm |
| J | Hook base width (claw width J) [mm] | 24 mm |
| O | Hook base depth usable (claw depth usable O) [mm] | 18 mm |
| H | Total hook root depth (total claw depth H) [mm] | 40 mm |
| L | Total claw thickness (L+1mm) [mm]: (claw distance to base surface) | 9 mm |
| Emin | Span inside pull-out (min.) [mm] | 100 mm |
| Emax | Span inside pull-out (max.) [mm] | 260 mm |
| Tmax | Max. torque [Nm] | 150 Nm |
| Fmax | Max. tractive force [t] | 7 t |
| Fmax | Max. tensile force [kN] | 70 kN |

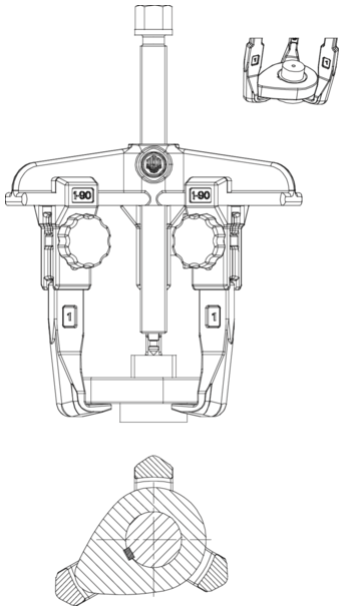




| Abbreviation | Attribut | Wert |
|---|---|---|
| X | Total width [mm] | 260 mm |
| Y | Total depth [mm] | 260 mm |
| Z | Total height [mm] | 254 mm |
| A | Clamping depth of external puller [mm] | 150 mm |
| S1 | Width across flats [mm] | 22 mm |
| Cmin | Span outside pull-off (min.) [mm] | 0 mm |
| Cmax | Span outside pull-off (max.) [mm] | 200 mm |
| K | Hook root thickness at the tip (claw thickness K) [mm] | 5 mm |
| J | Hook base width (claw width J) [mm] | 24 mm |
| O | Hook base depth usable (claw depth usable O) [mm] | 18 mm |
| H | Total hook root depth (total claw depth H) [mm] | 40 mm |
| L | Total claw thickness (L+1mm) [mm]: (claw distance to base surface) | 9 mm |
| Emin | Span inside pull-out (min.) [mm] | 100 mm |
| Emax | Span inside pull-out (max.) [mm] | 260 mm |
| Tmax | Max. torque [Nm] | 150 Nm |
| Fmax | Max. tractive force [t] | 7 t |
| Fmax | Max. tensile force [kN] | 70 kN |