RILEVATORE INTERNO LASER EYELIGHT-EM9980

EYELIGHT-EM9980 INTERNAL LASER DETECTOR

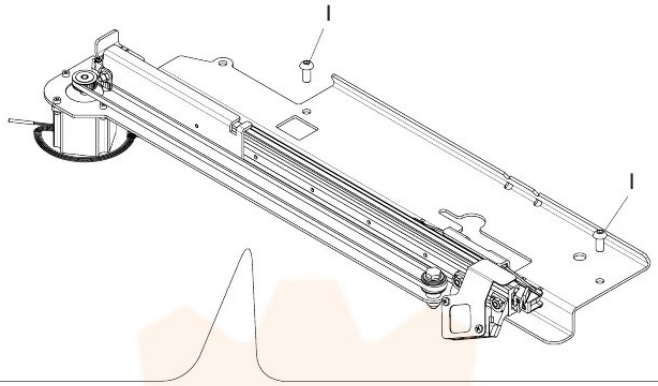

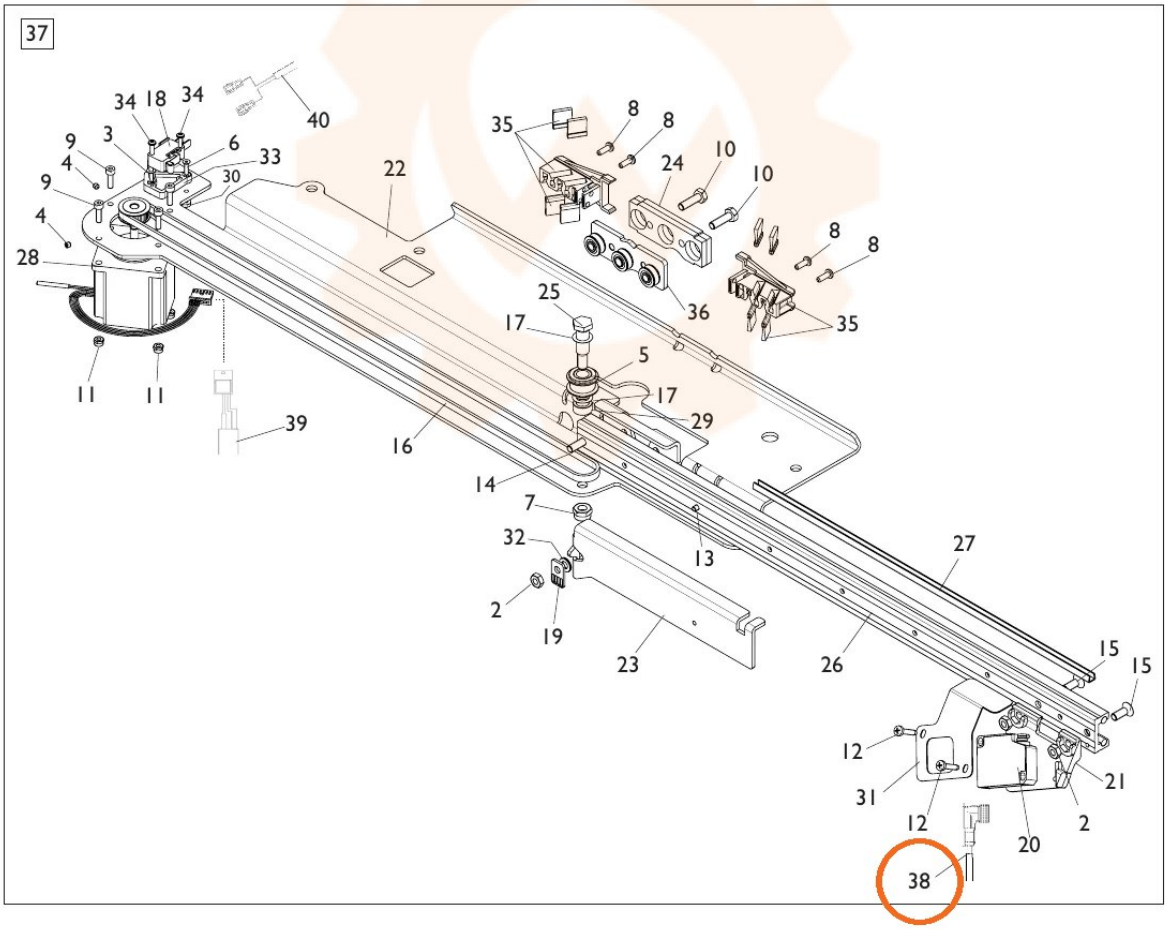

TORNA AL COMPLESSIVO
RETURNS TO OVERALL