30-10-2 3-jaw universal puller, up to 130 mm spread, 200 mm reach with extended jaws



DESCRIPTION

The 3-jaw universal puller is used for pulling off bearings, gears and discs in all common sizes for trades, workshops and industry. This makes it possible to loosen any component that sits on a shaft and is freely accessible from the outside. Equipped with robust and adjustable standard jaws, the puller all-rounder ensures particularly safe, non-destructive disassembly for both external extraction and internal extraction. The 3-jaw design guarantees even load distribution and therefore a particularly secure hold on the part to be pulled off.

APPLICATION AREA

To extract bearings, gears, and discs in all common sizes for crafts, workshops, and industry.

BENEFIT

- The screw connection enables easy loosening and particularly tight fastening of the jaws with an allen key
- 3-jaw ensures an even distribution of force and allows for greater pulling forces.
- Application also for eccentric components through freely movable, sliding puller jaws on the crossbar.
- Hexagonal profile on the crossbar for secure counterholding
- Variable adjustment to any span between 0 mm – 130 mm
- Anti-slip safety clamping of the claw in the sliding piece (Armlock Technology)
- Safe setup of the spindle through a rotatable spindle tip on both smooth surfaces and when centering (Switch Technology)
- Optional convertible from an external puller to an internal extractor by reversing the jaws.
- Anti-slip safety (spindle neck) at the spindle head for safe work with wrench
- Spindle output to protect the thread
- Jaws, spindle, and crossbar have a spare part number for easy reordering.
- Pullers are labeled with technical attributes and manufacturer information (label)

OPERATION

- Position the puller jaws from the outside onto the part to be removed
- Push the claws under the component
- Use a wrench to secure the jaws
- Manually apply pressure to the spindle for fixation
- Set the hexagon on the spindle head in motion with a ratchet or open-end wrench until the component is released

MASTER DATA

GTIN [GTIN]	4021176730801
Country of origin	DE
Material	Tool steel
Series	30-Classic
Gross weight [kg]	2,63 kg
Package contents	1 piece
Packaging Act	PAPPE PAP 21
Worldwide sales capability	Yes (REACH, RoHS, POP, PROP65, TSCA)

SPARE PARTS

- 1-190-S_Standard jaws (set)
- 30-10-T_Crossbar
- 614160_Mechanical pressure spindle
- K-2030-A-KIT

3-jaw universal puller, up to 130 mm spread, 200 mm reach with extended jaws

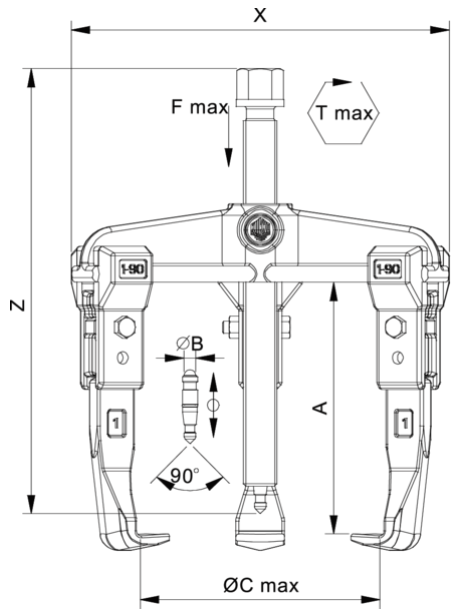

Abbreviation	Attribut	Wert
X	Total width [mm]	174 mm
Y	Total depth [mm]	174 mm
Z	Total height [mm]	183 mm
A	Clamping depth of external puller [mm]	200 mm
S1	Width across flats [mm]	17 mm
Cmin	Span outside pull-off (min.) [mm]	0 mm
Cmax	Span outside pull-off (max.) [mm]	130 mm
K	Hook root thickness at the tip (claw thickness K) [mm]	3 mm
J	Hook base width (claw width J) [mm]	20,5 mm
O	Hook base depth usable (claw depth usable O) [mm]	15,5 mm
H	Total hook root depth (total claw depth H) [mm]	31 mm
L	Total claw thickness (L+1mm) [mm]: (claw distance to base surface)	10 mm
Emin	Span inside pull-out (min.) [mm]	70 mm
Emax	Span inside pull-out (max.) [mm]	180 mm
Tmax	Max. torque [Nm]	80 Nm
Fmax	Max. tractive force [t]	6 t
Fmax	Max. tensile force [kN]	60 kN

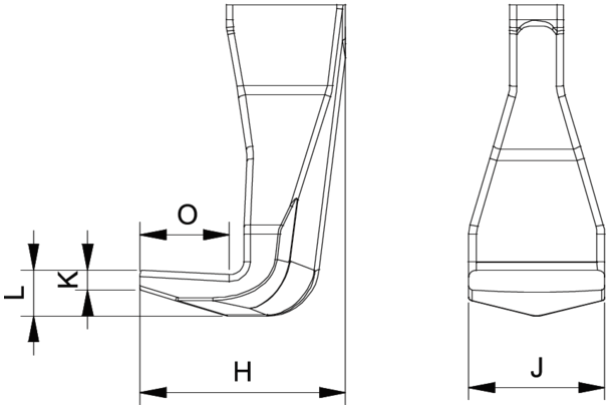

Abbreviation	Attribut	Wert
X	Total width [mm]	174 mm
Y	Total depth [mm]	174 mm
Z	Total height [mm]	183 mm
A	Clamping depth of external puller [mm]	200 mm
S1	Width across flats [mm]	17 mm
Cmin	Span outside pull-off (min.) [mm]	0 mm
Cmax	Span outside pull-off (max.) [mm]	130 mm
K	Hook root thickness at the tip (claw thickness K) [mm]	3 mm
J	Hook base width (claw width J) [mm]	20,5 mm
O	Hook base depth usable (claw depth usable O) [mm]	15,5 mm
H	Total hook root depth (total claw depth H) [mm]	31 mm
L	Total claw thickness (L+1mm) [mm]: (claw distance to base surface)	10 mm
Emin	Span inside pull-out (min.) [mm]	70 mm
Emax	Span inside pull-out (max.) [mm]	180 mm
Tmax	Max. torque [Nm]	80 Nm
Fmax	Max. tractive force [t]	6 t
Fmax	Max. tensile force [kN]	60 kN

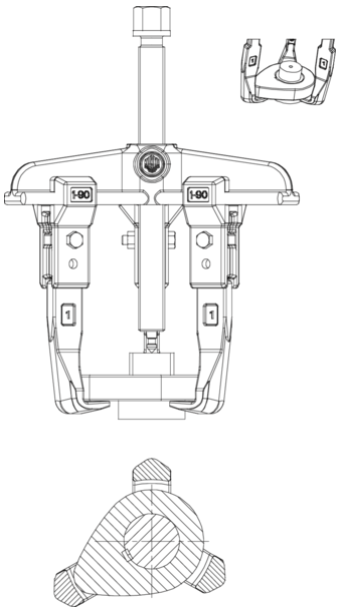

Abbreviation	Attribut	Wert
X	Total width [mm]	174 mm
Y	Total depth [mm]	174 mm
Z	Total height [mm]	183 mm
A	Clamping depth of external puller [mm]	200 mm

S1	W	17 mm
Cmin	S	0 mm
Cmax	S	130 mm
K	H	3 mm
J	H	20,5 mm
O	H	15,5 mm
H	T	31 mm
L	T	face) 10 mm
Emin	S	70 mm
Emax	S	180 mm
Tmax	M	80 Nm
Fmax	M	6 t
Fmax	M	60 kN

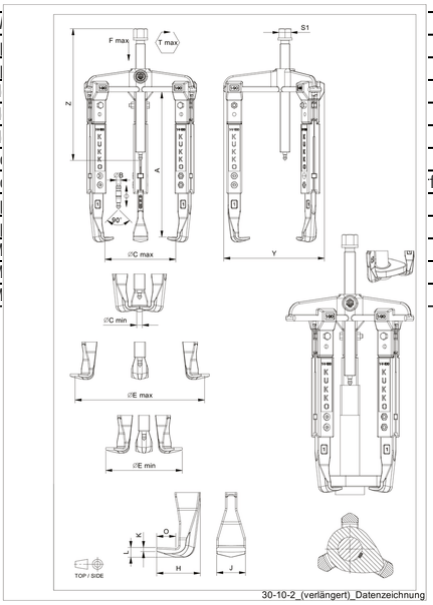

30-10-2_(verlängert)_Datenzeichnung

Abbreviation	Attribut	Wert
X	Total width [mm]	174 mm
Y	Total depth [mm]	174 mm
Z	Total height [mm]	183 mm
A	Clamping depth of external puller [mm]	200 mm
S1	Width across flats [mm]	17 mm
Cmin	Span outside pull-off (min.) [mm]	0 mm
Cmax	Span outside pull-off (max.) [mm]	130 mm
K	Hook root thickness at the tip (claw thickness K) [mm]	3 mm
J	Hook base width (claw width J) [mm]	20,5 mm
O	Hook base depth usable (claw depth usable O) [mm]	15,5 mm
H	Total hook root depth (total claw depth H) [mm]	31 mm
L	Total claw thickness (L+1mm) [mm]: (claw distance to base surface)	10 mm
Emin	Span inside pull-out (min.) [mm]	70 mm
Emax	Span inside pull-out (max.) [mm]	180 mm
Tmax	Max. torque [Nm]	80 Nm
Fmax	Max. tractive force [t]	6 t
Fmax	Max. tensile force [kN]	60 kN