Fitting PG16 | Mondolfo Ferro 3-02007

Mondolfo Ferro Aquila AS 905 · 2020 · Tekening 11 · positie 19

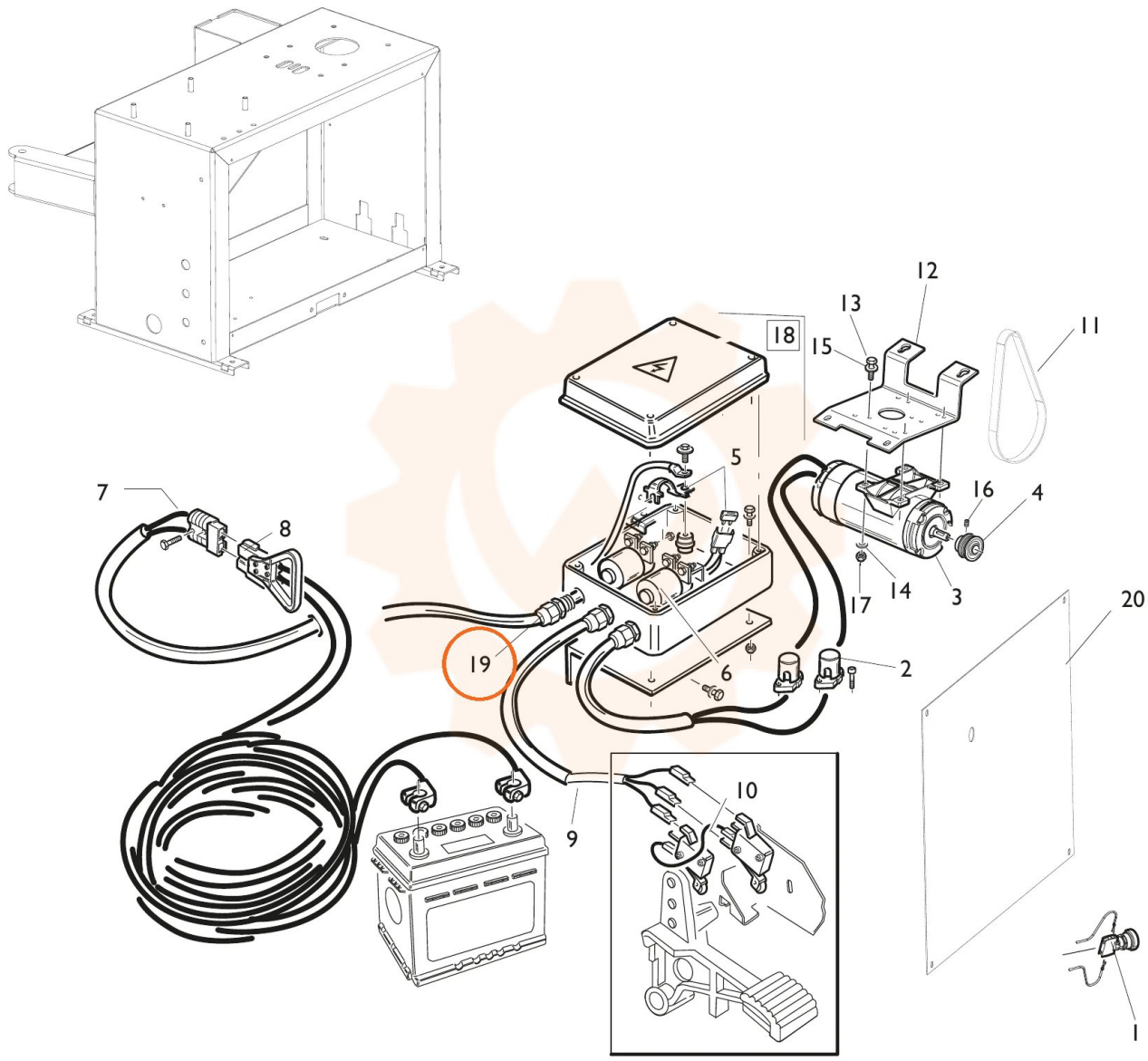
12
13
18
15
11
5
7
16
4
8
14
3
17
20
19
6
2
10
9
1