220+ Universal puller with sliding hammer, up to 150 mm spread, with 1.7 kg kg impact weight



APPLICATION IMAGE

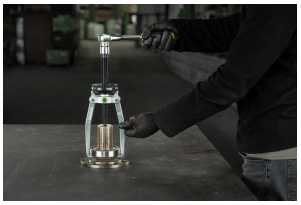

DESCRIPTION

The 2-jaw and 3-jaw pullers with conical self-tensioning are used for concentric pulling of bearings, gears, and discs in all common sizes for crafts, workshops, and industry. This allows for the removal of any component that sits on a shaft and is freely accessible from the outside. With the tightening of the tension cone, the puller jaws are automatically centered. By operating the tension cone, the desired spread can be set. Additionally, the puller jaws can be pre-tensioned using the cone to prevent possible slipping. Usable as both external extractors and internal extractors (in combination with a sliding hammer) by simply reversing the puller jaws and the tension cone.

APPLICATION AREA

For external extraction and internal extraction of gears, ball bearings, and other parts in craft, industry, and workshop.

BENEFIT

- By modifying the puller jaws, various pulling methods are ensured.
- The internal puller can be designed either as a 2-jaw or 3-jaw tool, providing a flexible grip for the respective part.
- The jaws self-center and secure themselves tightly to the part being pulled off.
- The cone-directed span width adjustment makes the universal puller also variable depending on the size of the part and allows for quick adjustment to the pulling situation.
- The shape of the sliding piece allows for a high impact weight of the sliding hammer with simple application.
- The internal stop point of the sliding piece prevents crushing and ensures a safe working process.
- If there is not enough space, the impact weight of the sliding hammer can be reversed.

OPERATION

.

MASTER DATA

GTIN [GTIN]	4021176009754
Country of origin	DE
Material	Tool steel
Series	220/221
Gross weight [kg]	6,19 kg
Package contents	1 piece
Packaging Act	PAPPE PAP 21
Worldwide sales capability	Yes (REACH, RoHS, POP, PROP65, TSCA)

SPARE PARTS

- 220-02-165-P_2 puller jaws (pair)
- 220-03-165-S_3 puller set

Universal puller with sliding hammer, up to 150 mm spread, with 1.7 kg kg impact weight

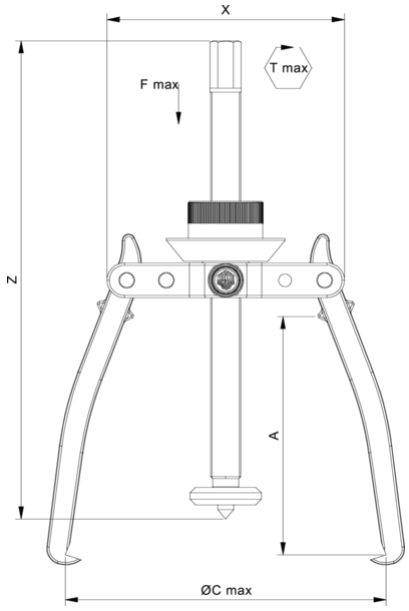

Abbreviation	Attribut	Wert
X	Total width [mm]	230 mm
Y	Total depth [mm]	75 mm
Z	Total height [mm]	600 mm
A	Clamping depth of external puller [mm]	170 mm
Cmin	Span outside pull-off (min.) [mm]	0 mm
Cmax	Span outside pull-off (max.) [mm]	150 mm
O	Hook base depth usable (claw depth usable O) [mm]	10 mm
Emin	Span inside pull-out (min.) [mm]	60 mm
Emax	Span inside pull-out (max.) [mm]	180 mm
A	Impact distance [mm]	250 mm

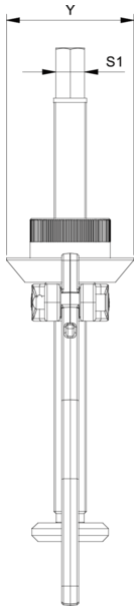

Abbreviation	Attribut	Wert
X	Total width [mm]	230 mm
Y	Total depth [mm]	75 mm
Z	Total height [mm]	600 mm
A	Clamping depth of external puller [mm]	170 mm
Cmin	Span outside pull-off (min.) [mm]	0 mm
Cmax	Span outside pull-off (max.) [mm]	150 mm
O	Hook base depth usable (claw depth usable O) [mm]	10 mm
Emin	Span inside pull-out (min.) [mm]	60 mm
Emax	Span inside pull-out (max.) [mm]	180 mm
A	Impact distance [mm]	250 mm

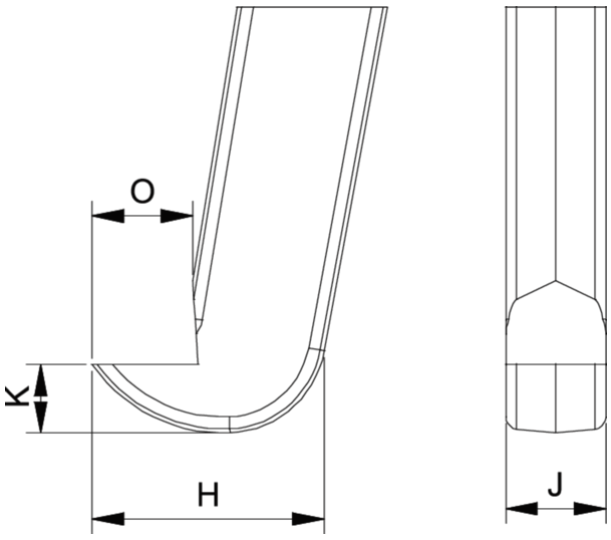

Abbreviation	Attribut	Wert
X	Total width [mm]	230 mm
Y	Total depth [mm]	75 mm
Z	Total height [mm]	600 mm
A	Clamping depth of external puller [mm]	170 mm
Cmin	Span outside pull-off (min.) [mm]	0 mm
Cmax	Span outside pull-off (max.) [mm]	150 mm

O	Hook base depth usable (claw depth usable O) [mm]	10 mm
Emin	Span inside pull-out (min.) [mm]	60 mm
Emax	Span inside pull-out (max.) [mm]	180 mm
A	Impact distance [mm]	250 mm