18-212A Thread adapter (pair) M12



DESCRIPTION

The thread adapters of series 18-A are used together with the pullers of series 18 for removing and pulling components with threads, such as dowel pins, keyways, or bolts, in crafts, industry, and workshops. The separation-puller process is capable of first gently separating those parts before they can be pulled out from the outside.

APPLICATION AREA

For removing components with threads, such as dowel pins, key bars, or bolts from series 18.

BENEFIT

- The thread adapters allow for the careful and secure removal of parts with threaded holes.

MASTER DATA

GTIN [GTIN]	4021176338298
Country of origin	DE
Material	Tool steel
Series	18-A
Gross weight [kg]	0,285 kg
Package contents	1 few
Packaging Act	Rezykkat rHDPE 61
Worldwide sales capability	Yes (REACH, RoHS, POP, PROP65, TSCA)

SUITABLE FOR

- 18-2_extracting device

SPARE PARTS

- GE12-1415_spindle insert
- VM1415-1415_connecting nut

Thread adapter (pair) M12

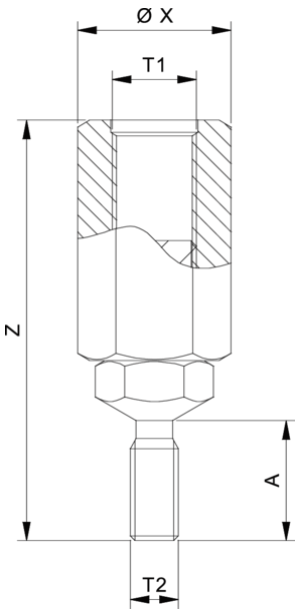

Abbreviation	Attribut	Wert
Z	Total length [mm]	78 mm
X	Outside diameter of the connecting nut [mm]	25 mm
S1	Width across flats connecting nut [mm]	22 mm
S2	Width across flats of thread insert [mm]	17 mm
A	Screw-in length of the thread adapter [mm]	28
T1	Mounting thread for tension bolt [mm]	M14x1,5
T2	Insert thread	M12

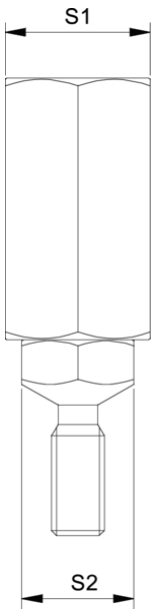

Abbreviation	Attribut	Wert
Z	Total length [mm]	78 mm
X	Outside diameter of the connecting nut [mm]	25 mm
S1	Width across flats connecting nut [mm]	22 mm
S2	Width across flats of thread insert [mm]	17 mm
A	Screw-in length of the thread adapter [mm]	28
T1	Mounting thread for tension bolt [mm]	M14x1,5
T2	Insert thread	M12

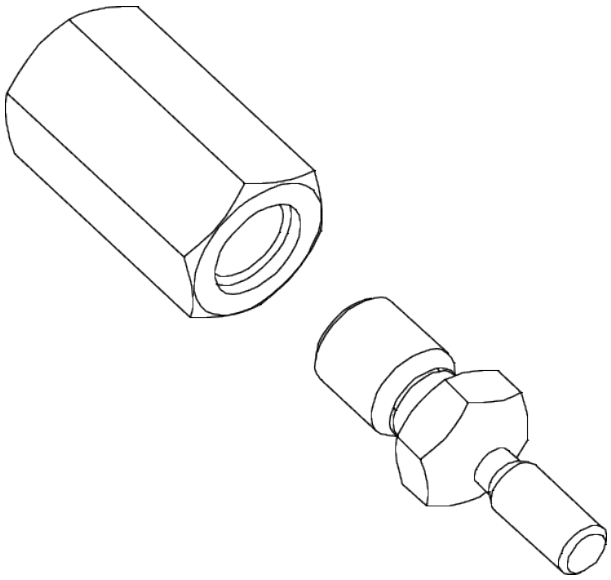

Abbreviation	Attribut	Wert
Z	Total length [mm]	78 mm
X	Outside diameter of the connecting nut [mm]	25 mm
S1	Width across flats connecting nut [mm]	22 mm
S2	Width across flats of thread insert [mm]	17 mm
A	Screw-in length of the thread adapter [mm]	28
T1	Mounting thread for tension bolt [mm]	M14x1,5
T2	Insert thread	M12