20-2+3 2-jaw universal puller with quick adjustment jaws, up to 160 mm spread, 300 mm reach



APPLICATION IMAGE



DESCRIPTION

Based on the ingenuity and pioneering spirit of Alfred Kleinbongartz, the universal pullers in series 20+ with sliding, always parallel jaws receive a functional upgrade. The focus is on ease of operation and user-friendliness. Specifically, the following optimizations were made: For even greater flexibility during pulling, the puller range has been expanded by two sizes (20-0+ and 20-00+). This results in a spread range of 0 to 350 mm for external extraction, as well as a maximum tension force of 2.5 to 8.5 t. To increase load capacity, the pullers were equipped with reinforced shoulders, creating a stable H-profile. This is thanks to the newly redesigned, innovative crossbar design, which ensures maximum stability even under high tension force. Above the crossbar there is an adjustment scale as an orientation aid, which enables even adjustment of the jaws and, even at the highest pulling forces, ensures centric and force-optimized pulling. Thanks to the quick-clamping jaws, settings and readjustments can be carried out quickly and easily. Below the crossbar, in addition to the crossbar spare part number for reorders, there is another six-digit number. The first three digits indicate which spindle is compatible with the crossbar. The last three digits (xxx) identify the variable spindle length, which varies depending on the version between 85 mm and 600 mm. In addition to mechanical spindles with a different thread length, depending on the size of the puller, grease-hydraulic spindles can also be used as part of a hydraulic upgrade for easy and controlled pulling of particularly tight-fitting parts. Another advantage is the two eyelets on the sides of the crossbar for attaching a Fall protection (series 660), which additionally secures the puller and ensures safe fixing during work or storage. The 2-jaw universal pullers with quickly adjustable and robust standard jaws are used for particularly safe pulling of bearings, gears and discs in all common sizes for trade, workshop and industry. This allows any component to be removed that sits on a shaft and is freely accessible from the outside. By simply turning the jaws over, the pullers can also be used as an internal extractor.

APPLICATION AREA

To remove bearings, gears, and discs in all common sizes for craft, workshop, and industry.

BENEFIT

- The screw connection allows for easy loosening and particularly tight fastening of the jaws with an allen key
- Application also for eccentric components through freely movable, sliding puller jaws on the crossbar.
- Hexagonal profile on the crossbar for secure counter-holding
- Variable adjustment for any spread between 10 mm – 160 mm
- Safe shear suspension of the claw in the sliding piece (Armlock Technology)
- Secure mounting of the spindle through the rotatable spindle tip on both smooth surfaces and in centering (Switch Technology)
- Optional convertible from an external puller to an internal extractor by reversing the jaws.
- Anti-slip safety (spindle neck) at spindle head for safe working with wrench
- Spindle run-out to protect the thread
- Jaws, spindle, and crossbar have a spare part number for easy reordering
- Pullers are labeled with technical attributes and manufacturer information (label)

OPERATION

- Position the puller jaws from the outside onto the part to be removed
- Push the claws under the component
- Use a wrench to secure the jaws
- Manually apply pressure to the spindle for fixation
- Set the hexagon on the spindle head in motion with a ratchet or open-end wrench until the component is released

MASTER DATA

GTIN [GTIN]	4021176773327
Country of origin	DE
Material	Tool steel
Series	20+
Gross weight [kg]	4,615 kg
Package contents	1 piece
Packaging Act	PAPPE PAP 21
Worldwide sales capability	Yes (REACH, RoHS, POP, PROP65, TSCA)

SPARE PARTS

- 2-152-P_Quick adjustable standard jaws (pair)
- 20-2-T_Crossbar for 20-2
- 621220_Mechanical pressure spindle

2-jaw universal puller with quick adjustment jaws, up to 160 mm spread, 300 mm reach

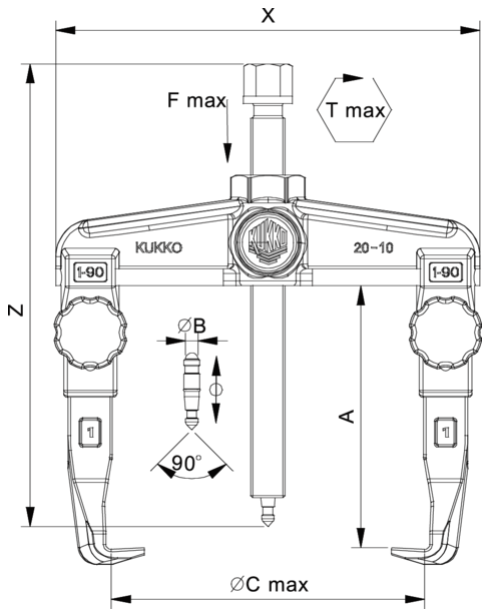

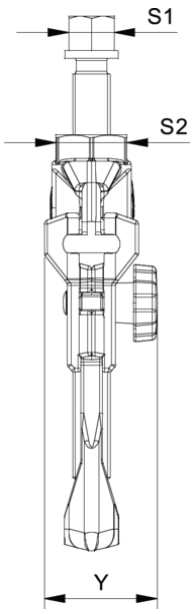

Abbreviation	Attribut	Wert
X	Total width [mm]	216 mm
Y	Total depth [mm]	50 mm
Z	Total height [mm]	454 mm
A	Clamping depth of external puller [mm]	300 mm
S1	Width across flats [mm]	22 mm
S2	Width across flats [mm]	36 mm
Cmin	Span outside pull-off (min.) [mm]	10 mm
Cmax	Span outside pull-off (max.) [mm]	160 mm
K	Hook root thickness at the tip (claw thickness K) [mm]	5 mm
J	Hook base width (claw width J) [mm]	24 mm
O	Hook base depth usable (claw depth usable O) [mm]	15 mm
H	Total hook root depth (total claw depth H) [mm]	40 mm
Emin	Span inside pull-out (min.) [mm]	100 mm
Emax	Span inside pull-out (max.) [mm]	220 mm
Tmax	Max. torque [Nm]	150 Nm
Fmax	Max. tractive force [t]	6 t
Fmax	Max. tensile force [kN]	60 kN

Abbreviation	Attribut	Wert
X	Total width [mm]	216 mm
Y	Total depth [mm]	50 mm
Z	Total height [mm]	454 mm
A	Clamping depth of external puller [mm]	300 mm
S1	Width across flats [mm]	22 mm
S2	Width across flats [mm]	36 mm
Cmin	Span outside pull-off (min.) [mm]	10 mm
Cmax	Span outside pull-off (max.) [mm]	160 mm
K	Hook root thickness at the tip (claw thickness K) [mm]	5 mm
J	Hook base width (claw width J) [mm]	24 mm
O	Hook base depth usable (claw depth usable O) [mm]	15 mm
H	Total hook root depth (total claw depth H) [mm]	40 mm
Emin	Span inside pull-out (min.) [mm]	100 mm
Emax	Span inside pull-out (max.) [mm]	220 mm
Tmax	Max. torque [Nm]	150 Nm
Fmax	Max. tractive force [t]	6 t
Fmax	Max. tensile force [kN]	60 kN

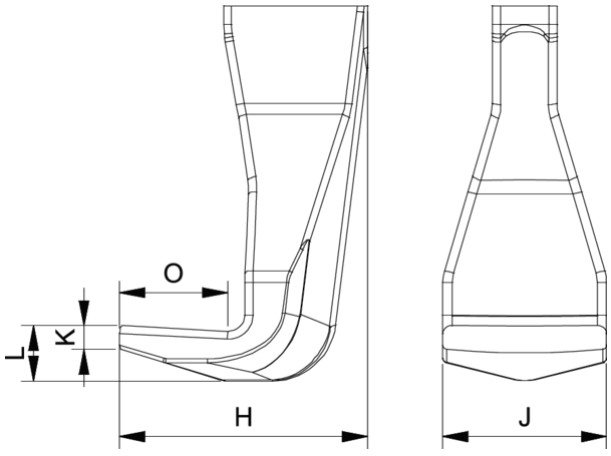

Abbreviation	Attribut	Wert
X	Total width [mm]	216 mm
Y	Total depth [mm]	50 mm

Z	Total height [mm]	454 mm
A	Clamping depth of external puller [mm]	300 mm
S1	Width across flats [mm]	22 mm
S2	Width across flats [mm]	36 mm
Cmin	Span outside pull-off (min.) [mm]	10 mm
Cmax	Span outside pull-off (max.) [mm]	160 mm
K	Hook root thickness at the tip (claw thickness K) [mm]	5 mm
J	Hook base width (claw width J) [mm]	24 mm
O	Hook base depth usable (claw depth usable O) [mm]	15 mm
H	Total hook root depth (total claw depth H) [mm]	40 mm
Emin	Span inside pull-out (min.) [mm]	100 mm
Emax	Span inside pull-out (max.) [mm]	220 mm
Tmax	Max. torque [Nm]	150 Nm
Fmax	Max. tractive force [t]	6 t
Fmax	Max. tensile force [kN]	60 kN

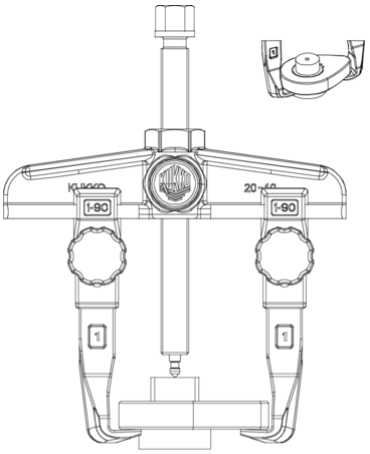

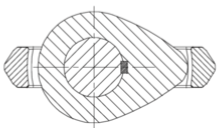

Abbreviation	Attribut	Wert
X	Total width [mm]	216 mm
Y	Total depth [mm]	50 mm
Z	Total height [mm]	454 mm
A	Clamping depth of external puller [mm]	300 mm
S1	Width across flats [mm]	22 mm
S2	Width across flats [mm]	36 mm
Cmin	Span outside pull-off (min.) [mm]	10 mm
Cmax	Span outside pull-off (max.) [mm]	160 mm
K	Hook root thickness at the tip (claw thickness K) [mm]	5 mm
J	Hook base width (claw width J) [mm]	24 mm
O	Hook base depth usable (claw depth usable O) [mm]	15 mm
H	Total hook root depth (total claw depth H) [mm]	40 mm
Emin	Span inside pull-out (min.) [mm]	100 mm
Emax	Span inside pull-out (max.) [mm]	220 mm
Tmax	Max. torque [Nm]	150 Nm
Fmax	Max. tractive force [t]	6 t
Fmax	Max. tensile force [kN]	60 kN