20-40-H 2-jaw universal puller with hydraulic spindle, spread 15 mm to 650 mm, reach 300 mm



APPLICATION IMAGE



DESCRIPTION

The 2-jaw universal pullers with sliding, always parallel jaws from series 20 are used for pulling bearings, gears, and discs in all common sizes for crafts, workshop, and industry. This allows for the removal of any component that sits on a shaft and is freely accessible from the outside. The puller all-rounders ensure a non-destructive disassembly for both external extraction and internal pulling. Depending on the application, there are different variants of the 2-jaw universal puller. Series 20 also impresses with its modular system, which offers a variety of optional combinations. This includes, for example, different types of jaws, extensions, interchangeable pressure pieces, hydraulic extensions, and much more.

APPLICATION AREA

To detach bearings, gears, and discs in all common sizes for crafts, workshops, and industry.

BENEFIT

- The screw connection allows for easy loosening and particularly tight fastening of the jaws with an allen key
- Application also for eccentric components through freely movable jaws gliding on the crossbar
- Spindle outlet to protect the thread
- Fat hydraulic spindle ensures easy and controlled removal of tightly seated parts with minimal effort.
- Optional convertible from an external puller to an internal extractor by reversing the extractor jaws.
- Anti-slip safety (spindle neck) at the spindle head for safe working with a wrench
- Spindle run-out to protect the thread

OPERATION

- Position the puller jaws on the part to be removed from the outside
- Slide the jaws under the component
- Use a wrench to secure the jaws
- Manually pull the spindle to lock it in place
- Activate the lever arm on the hydraulic pump until the part is released

MASTER DATA

GTIN [GTIN]	4021176732218
Country of origin	DE
Material	Tool steel
Series	20-H
Gross weight [kg]	28,29 kg
Package contents	1 piece
Packaging Act	PAPPE PAP 21
Worldwide sales capability	Yes (REACH, RoHS, POP, PROP65, TSCA)

SPARE PARTS

- 20-40-T_Crossbar for 20-40
- 20-5-T_traverse with socket for 20-5
- 4-SP-P_jaws with adjustable length (pair)
- 5-SP-P_jaws with adjustable length (pair)
- 8-1-B_Long hydraulic spindle
- 8-HP-633_Hydraulic spindle with hand lever operation
- 8-HP-EP

2-jaw universal puller with hydraulic spindle, spread 15 mm to 650 mm, reach 300 mm

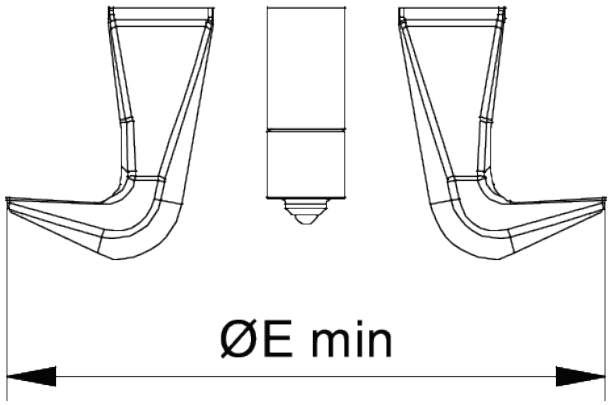

Abbreviation	Attribut	Wert
A	Clamping depth of external puller [mm]	300 mm
Cmin	Span outside pull-off (min.) [mm]	15 mm
Cmax	Span outside pull-off (max.) [mm]	650 mm
Emin	Span inside pull-out (min.) [mm]	200 mm
Emax	Span inside pull-out (max.) [mm]	710 mm
Fmax	Max. tractive force [t]	12 t
Fmax	Max. tensile force [kN]	120 kN

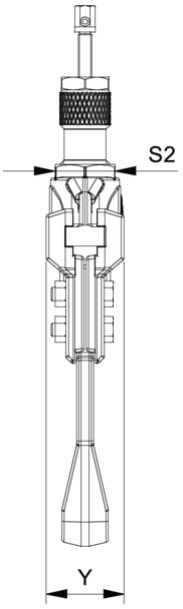

Abbreviation	Attribut	Wert
A	Clamping depth of external puller [mm]	300 mm
Cmin	Span outside pull-off (min.) [mm]	15 mm
Cmax	Span outside pull-off (max.) [mm]	650 mm
Emin	Span inside pull-out (min.) [mm]	200 mm
Emax	Span inside pull-out (max.) [mm]	710 mm
Fmax	Max. tractive force [t]	12 t
Fmax	Max. tensile force [kN]	120 kN

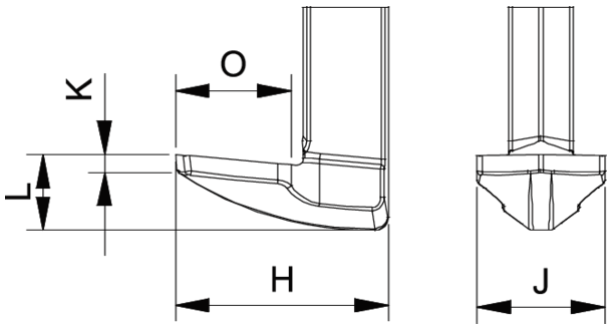

Abbreviation	Attribut	Wert
A	Clamping depth of external puller [mm]	300 mm
Cmin	Span outside pull-off (min.) [mm]	15 mm
Cmax	Span outside pull-off (max.) [mm]	650 mm
Emin	Span inside pull-out (min.) [mm]	200 mm
Emax	Span inside pull-out (max.) [mm]	710 mm
Fmax	Max. tractive force [t]	12 t
Fmax	Max. tensile force [kN]	120 kN

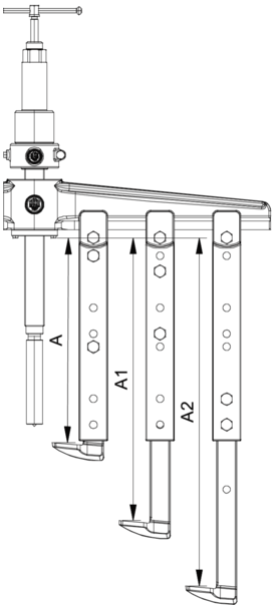

Abbreviation	Attribut	Wert
A	Clamping depth of external puller [mm]	300 mm
Cmin	Span outside pull-off (min.) [mm]	15 mm
Cmax	Span outside pull-off (max.) [mm]	650 mm
Emin	Span inside pull-out (min.) [mm]	200 mm
Emax	Span inside pull-out (max.) [mm]	710 mm
Fmax	Max. tractive force [t]	12 t

Fmax	Max. tensile force [kN]	120 kN

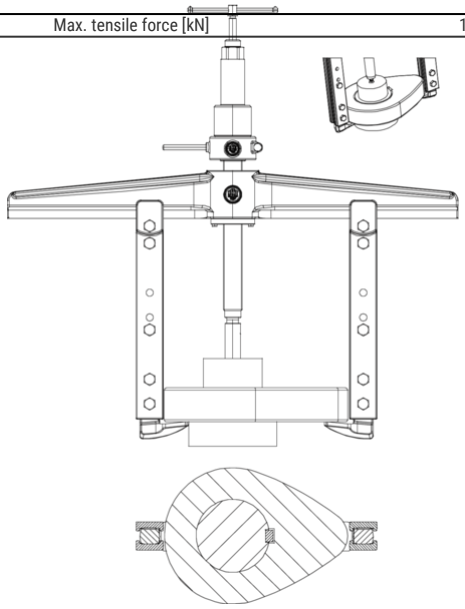

Abbreviation	Attribut	Wert
A	Clamping depth of external puller [mm]	300 mm
Cmin	Span outside pull-off (min.) [mm]	15 mm
Cmax	Span outside pull-off (max.) [mm]	650 mm
Emin	Span inside pull-out (min.) [mm]	200 mm
Emax	Span inside pull-out (max.) [mm]	710 mm
Fmax	Max. tractive force [t]	12 t
Fmax	Max. tensile force [kN]	120 kN

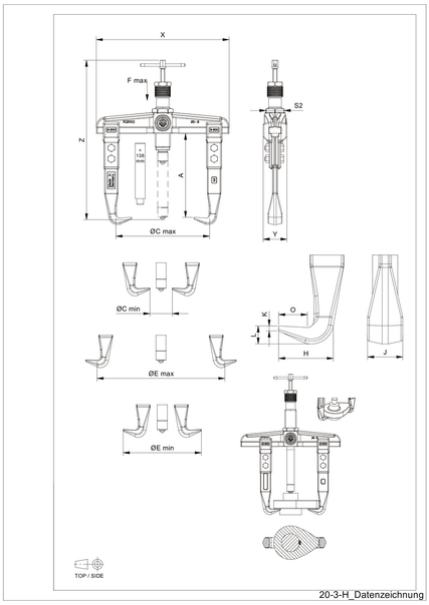

Abbreviation	Attribut	Wert
A	Clamping depth of external puller [mm]	300 mm
Cmin	Span outside pull-off (min.) [mm]	15 mm
Cmax	Span outside pull-off (max.) [mm]	650 mm
Emin	Span inside pull-out (min.) [mm]	200 mm
Emax	Span inside pull-out (max.) [mm]	710 mm
Fmax	Max. tractive force [t]	12 t
Fmax	Max. tensile force [kN]	120 kN