127-3 Direct pressure ball joint puller, with Ø 34 mm jaw opening, 10 t max. tension force



DESCRIPTION

The bell-shaped direct press ball joint puller of series 127 is used to press out the ball pins when removing ball joints as well as tie rod ends on tie rods in automotive and industry. The puller allows for damage-free work and is optimal when there is little space available.

APPLICATION AREA

For the expansion of spherical joints and tie rod ends on tie rods

BENEFIT

- Due to its simple yet effective design, the direct puller ball joint remover is particularly suitable for quick and uncomplicated application.

OPERATION

- Attach puller between ball joint and component
- Torque the spindle with torque wrench
- Threaded pin of the ball joint is pushed out of the component

MASTER DATA

GTIN [GTIN]	4021176981784
Country of origin	DE
Material	Tool steel
Series	127-0
Gross weight [kg]	0,965 kg
Package contents	1 piece
Packaging Act	Rezykkat rHDPE 61
Worldwide sales capability	Yes (REACH, RoHS, POP, PROP65, TSCA)

SPARE PARTS

- 618068_Mechanical spindle

Direct pressure ball joint puller, with Ø 34 mm jaw opening, 10 t max. tension force

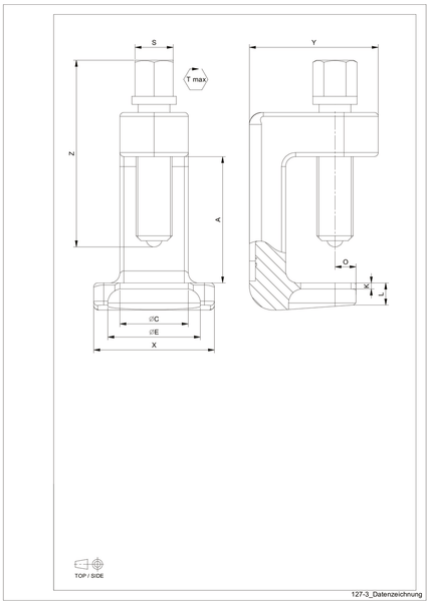

Abbreviation	Attribut	Wert
X	Total width [mm]	60 mm
Y	Total depth [mm]	64 mm
S1	Width across flats [mm]	19 mm
Tmax	Max. torque [Nm]	140 Nm
Fmax	Max. tractive force [t]	10 t
Fmax	Max. tensile force [kN]	100 kN
A	Insert depth [mm]	63 mm
C	Fork opening diameter [mm]	34 mm
O	Distance from center of spindle to tip of fork [mm]	10,5 mm
K	Fork thickness at the tip, K [mm]	3 mm
L	Total fork thickness, L [mm]	10 mm