# GRUPPO STALLONATORE
# BEAD BREAKING GROUP

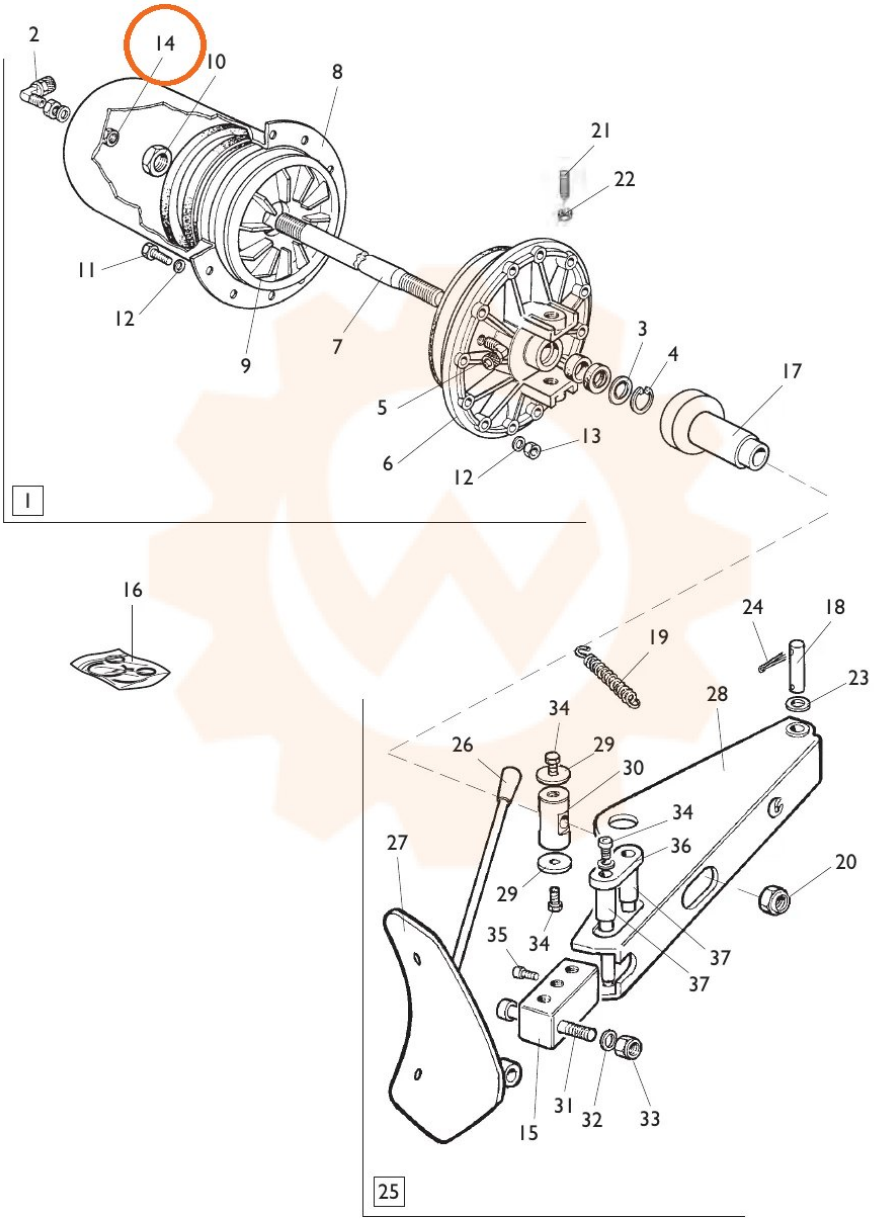


**PANZITTA SALES & SERVICE**
**72 George Avenue**
**Wilkes-Barre, PA 18705**
**570-822-6720 800-822-6720**
**www.panzittasales.com**