20-10 2-jaw universal puller, up to 130 mm spread, 100 mm reach



APPLICATION IMAGE



DESCRIPTION

The 2-jaw universal puller is used for extracting bearings, gears, and discs in all common sizes for crafts, workshops, and industry. It can loosen any component that sits on a shaft and is freely accessible from the outside. Equipped with robust and adjustable standard jaws, the puller all-rounder ensures particularly safe, non-destructive disassembly when performing external extraction as well as internal extraction.

APPLICATION AREA

To remove bearings, gears, and discs in all common sizes for craft, workshop, and industry.

BENEFIT

- The screw connection allows easy loosening and particularly tight fastening of the jaws with an allen key
- Application also for eccentric components through freely movable, sliding jaws on the crossbar.
- Hexagonal profile on the crossbar for secure counter-holding
- Variable adjustment to any spread between 0 mm – 130 mm
- Shear-safe suspension of the claw in the sliding piece (ARMLOCK Technology)
- Safe positioning of the spindle through a rotatable spindle tip on both smooth surfaces and during centering (SWITCH Technology)
- Optional convertible from an external puller to an internal extractor by reversing the jaws.
- Anti-slip safety (spindle neck) at the spindle head for safe working with socket wrench.
- Spindle run-out to protect the thread
- Jaws, spindle, and crossbar have a spare part number for easy reordering.
- Pullers are labeled with technical attributes and manufacturer information (label)

OPERATION

- Place the puller jaws from the outside onto the part to be pulled off
- Slide the claws under the component
- Use a wrench to secure the jaws
- Manually pull the spindle for fixation
- Set the hexagon at the spindle head in motion with a ratchet or a box wrench until the component is released

MASTER DATA

GTIN [GTIN]	4021176009921
Country of origin	DE
Material	Tool steel
Series	20-Classic
Gross weight [kg]	1,42 kg
Package contents	1 piece
Packaging Act	PAPPE PAP 21
Worldwide sales capability	Yes (REACH, RoHS, POP, PROP65, TSCA)

SPARE PARTS

- 1-90-P_standard jaws
- 20-10-T crossbar für 20-10
- 612140_Double-sided spindle tip
- 614160_Mechanical pressure spindle
- K-2030-A-KIT

2-jaw universal puller, up to 130 mm spread, 100 mm reach

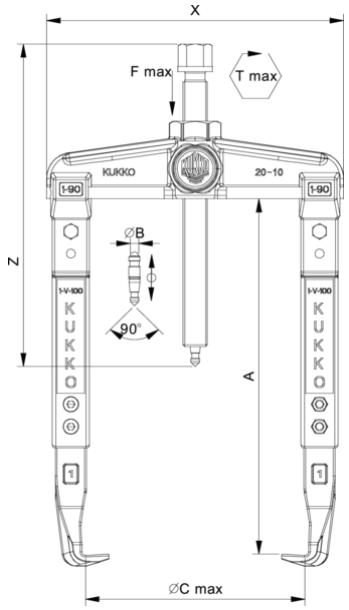



Abbreviation	Attribut	Wert
X	Total width [mm]	172 mm
Y	Total depth [mm]	37 mm
Z	Total height [mm]	183 mm
A	Clamping depth of external puller [mm]	100 mm
S1	Width across flats [mm]	17 mm
S2	Width across flats [mm]	27 mm
Cmin	Span outside pull-off (min.) [mm]	0 mm
Cmax	Span outside pull-off (max.) [mm]	130 mm
K	Hook root thickness at the tip (claw thickness K) [mm]	3 mm
J	Hook base width (claw width J) [mm]	20,5 mm
O	Hook base depth usable (claw depth usable O) [mm]	15,5 mm
H	Total hook root depth (total claw depth H) [mm]	31 mm
L	Total claw thickness (L+1mm) [mm]: (claw distance to base surface)	10 mm
Emin	Span inside pull-out (min.) [mm]	95 mm
Emax	Span inside pull-out (max.) [mm]	160 mm
Tmax	Max. torque [Nm]	80 Nm
Fmax	Max. tractive force [t]	4.5 t
Fmax	Max. tensile force [kN]	45 kN

Abbreviation	Attribut	Wert
X	Total width [mm]	172 mm
Y	Total depth [mm]	37 mm
Z	Total height [mm]	183 mm
A	Clamping depth of external puller [mm]	100 mm
S1	Width across flats [mm]	17 mm
S2	Width across flats [mm]	27 mm
Cmin	Span outside pull-off (min.) [mm]	0 mm
Cmax	Span outside pull-off (max.) [mm]	130 mm
K	Hook root thickness at the tip (claw thickness K) [mm]	3 mm
J	Hook base width (claw width J) [mm]	20,5 mm
O	Hook base depth usable (claw depth usable O) [mm]	15,5 mm
H	Total hook root depth (total claw depth H) [mm]	31 mm
L	Total claw thickness (L+1mm) [mm]: (claw distance to base surface)	10 mm
Emin	Span inside pull-out (min.) [mm]	95 mm
Emax	Span inside pull-out (max.) [mm]	160 mm
Tmax	Max. torque [Nm]	80 Nm
Fmax	Max. tractive force [t]	4.5 t
Fmax	Max. tensile force [kN]	45 kN

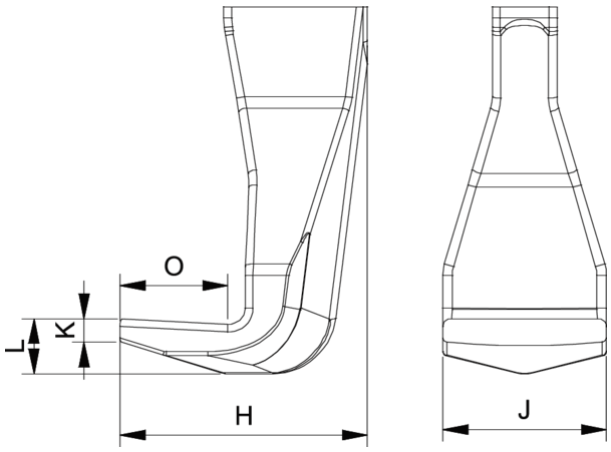

Abbreviation	Attribut	Wert
X	Total width [mm]	172 mm
Y	Total depth [mm]	37 mm

Z	Total height [mm]	183 mm
A	Clamping depth of external puller [mm]	100 mm
S1	Width across flats [mm]	17 mm
S2	Width across flats [mm]	27 mm
Cmin	Span outside pull-off (min.) [mm]	0 mm
Cmax	Span outside pull-off (max.) [mm]	130 mm
K	Hook root thickness at the tip (claw thickness K) [mm]	3 mm
J	Hook base width (claw width J) [mm]	20,5 mm
O	Hook base depth usable (claw depth usable O) [mm]	15,5 mm
H	Total hook root depth (total claw depth H) [mm]	31 mm
L	Total claw thickness (L+1mm) [mm]: (claw distance to base surface)	10 mm
Emin	Span inside pull-out (min.) [mm]	95 mm
Emax	Span inside pull-out (max.) [mm]	160 mm
Tmax	Max. torque [Nm]	80 Nm
Fmax	Max. tractive force [t]	4.5 t
Fmax	Max. tensile force [kN]	45 kN

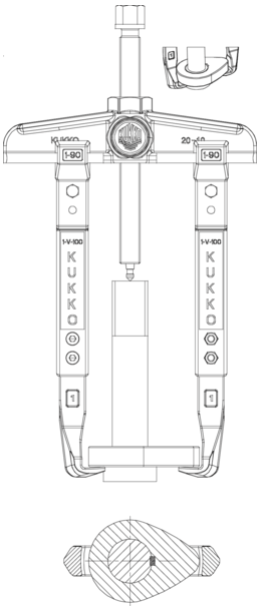

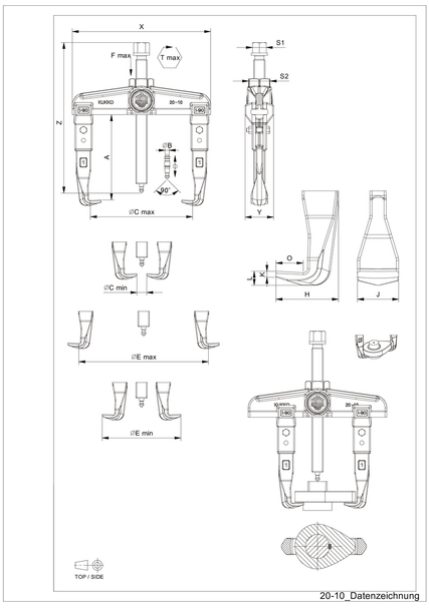

20-10_Datenzeichnung

Abbreviation	Attribut	Wert
X	Total width [mm]	172 mm
Y	Total depth [mm]	37 mm
Z	Total height [mm]	183 mm
A	Clamping depth of external puller [mm]	100 mm
S1	Width across flats [mm]	17 mm
S2	Width across flats [mm]	27 mm
Cmin	Span outside pull-off (min.) [mm]	0 mm
Cmax	Span outside pull-off (max.) [mm]	130 mm
K	Hook root thickness at the tip (claw thickness K) [mm]	3 mm
J	Hook base width (claw width J) [mm]	20,5 mm
O	Hook base depth usable (claw depth usable O) [mm]	15,5 mm
H	Total hook root depth (total claw depth H) [mm]	31 mm
L	Total claw thickness (L+1mm) [mm]: (claw distance to base surface)	10 mm

Abbreviation	Attribut	Wert
X	Total width [mm]	172 mm
Y	Total depth [mm]	37 mm
Z	Total height [mm]	183 mm
A	Clamping depth of external puller [mm]	100 mm
S1	Width across flats [mm]	17 mm
S2	Width across flats [mm]	27 mm
Cmin	Span outside pull-off (min.) [mm]	0 mm
Cmax	Span outside pull-off (max.) [mm]	130 mm
K	Hook root thickness at the tip (claw thickness K) [mm]	3 mm
J	Hook base width (claw width J) [mm]	20,5 mm
O	Hook base depth usable (claw depth usable O) [mm]	15,5 mm
H	Total hook root depth (total claw depth H) [mm]	31 mm
L	Total claw thickness (L+1mm) [mm]: (claw distance to base surface)	10 mm

Emin	Span inside pull-out (min.) [mm]	95 mm
Emax	Span inside pull-out (max.) [mm]	160 mm
Tmax	Max. torque [Nm]	80 Nm
Fmax	Max. tractive force [t]	4.5 t
Fmax	Max. tensile force [kN]	45 kN