IMPIANTO ELETTRICO
ELECTRICAL SYSTEM

VERSIONE DV
2 SPEED VERSION

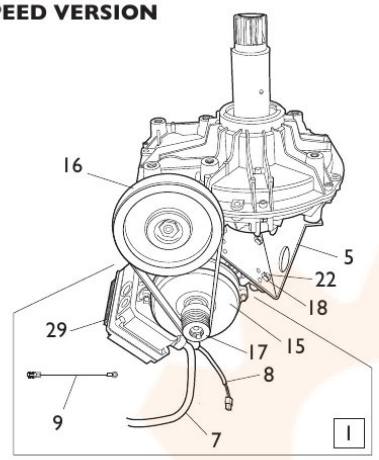

VERSIONE CCSAUS
CCSAUS VERSION

SOLO X CANADA
ONLY FOR CANADA

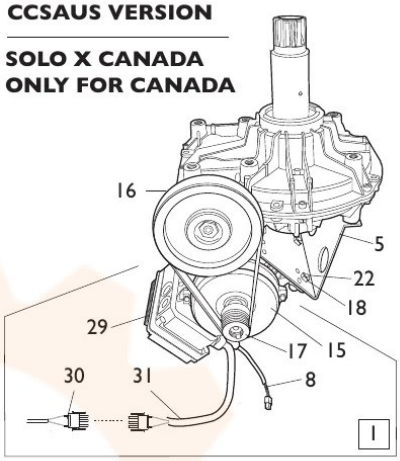

VERSIONE 1ph
1ph VERSION

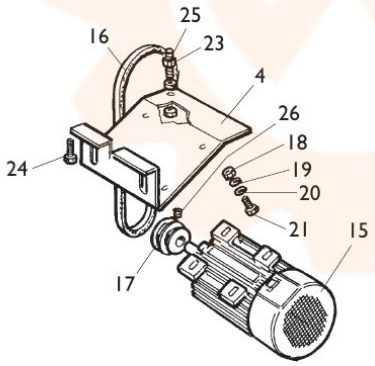

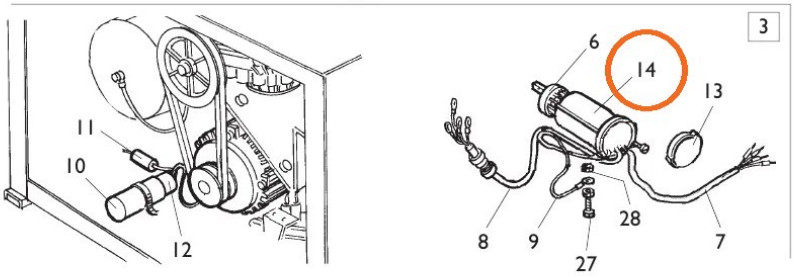

PANZITTA SALES & SERVICE
72 George Avenue
Wilkes-Barre, PA 18705
570-822-6720 800-822-6720
www.panzittasales.com