204-02 2-jaw bearing puller "Cobra" with side clamp, bearing separator, up to 90 mm spread, 100 mm reach



DESCRIPTION

The 2-jaw puller “Cobra” with side clamp and separating claw is used for pulling flush-mounted ball bearings, bearing rings, and workpieces. The special claw shape of the puller jaws grips underneath the part to be pulled when tightening the clamp and loosens it already before the actual pulling process. At the same time, the clamp increases the pressing force of the puller jaws manifold and thereby prevents slippage of the puller. By tightening the clamp, the sharp claws of the puller jaws grip under the part to be pulled and release it, already before the actual pulling process. The freely movable pin on the T-handle guarantees comfortable, one-handed tightening of the spindle in tight spaces.

APPLICATION AREA

To remove tight-fitting ball bearings, bearing rings, and workpieces.

BENEFIT

- Integrated, freely movable pen on the T-handle guarantees manual spindle drive in the tightest of spaces.
- The side clamp ensures that the puller jaws are pressed particularly tightly against the part being pulled off.
- Double force application from above and side guarantees 100% secure grip
- The slim design of the jaws allows access to hard-to-reach places.

OPERATION

- Apply the puller jaws from the outside to the part to be removed
- Tighten the side clamping clamp to loosen the component
- Manually pull the spindle to secure it on pressure
- Move the T-handle on the spindle head until the component is released

APPLICATION IMAGE



DETAIL IMAGE



MASTER DATA

GTIN [GTIN]	4021176339516
Country of origin	DE
Material	Tool steel
Series	204-0
Gross weight [kg]	1,985 kg
Package contents	1 piece
Packaging Act	PAPPE PAP 21
Worldwide sales capability	Yes (REACH, RoHS, POP, PROP65, TSCA)

SPARE PARTS

- 204-02-100-P_2 jaws (pair)
- 204-2-T_Crossbar
- 204201_clamp complete
- 621130_Mechanical spindle

2-jaw bearing puller "Cobra" with side clamp, bearing separator, up to 90 mm spread, 100 mm reach

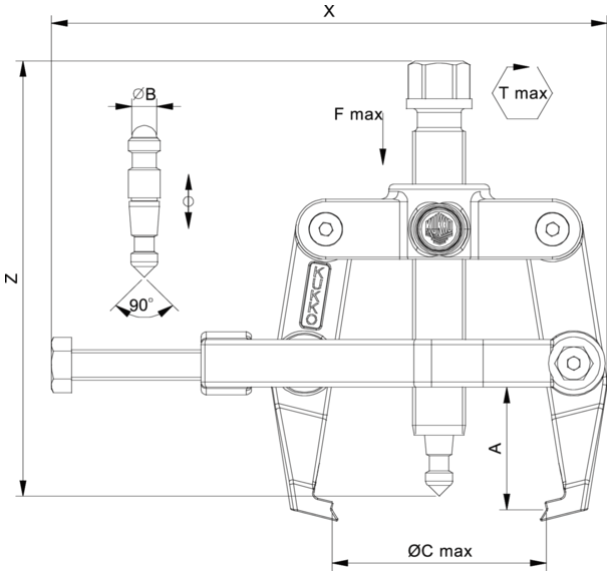

Abbreviation	Attribut	Wert
X	Total width [mm]	190 mm
Y	Total depth [mm]	64 mm
Z	Total height [mm]	155 mm
A	Clamping depth of external puller [mm]	100 mm
S1	Width across flats [mm]	22 mm
Cmin	Span outside pull-off (min.) [mm]	26 mm
Cmax	Span outside pull-off (max.) [mm]	90 mm
K	Hook root thickness at the tip (claw thickness K) [mm]	3 mm
J	Hook base width (claw width J) [mm]	24 mm
O	Hook base depth usable (claw depth usable O) [mm]	7 mm
H	Total hook root depth (total claw depth H) [mm]	20 mm
L	Total claw thickness (L+1mm) [mm]: (claw distance to base surface)	6 mm
Tmax	Max. torque [Nm]	75 Nm
Fmax	Max. tractive force [t]	4 t
Fmax	Max. tensile force [kN]	40 kN

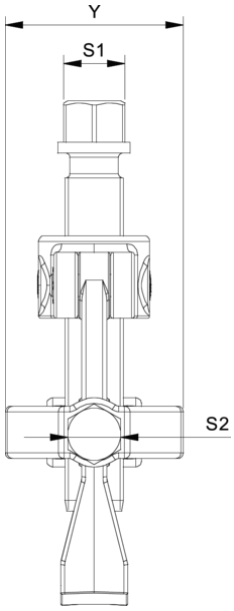

Abbreviation	Attribut	Wert
X	Total width [mm]	190 mm
Y	Total depth [mm]	64 mm
Z	Total height [mm]	155 mm
A	Clamping depth of external puller [mm]	100 mm
S1	Width across flats [mm]	22 mm
Cmin	Span outside pull-off (min.) [mm]	26 mm
Cmax	Span outside pull-off (max.) [mm]	90 mm
K	Hook root thickness at the tip (claw thickness K) [mm]	3 mm
J	Hook base width (claw width J) [mm]	24 mm
O	Hook base depth usable (claw depth usable O) [mm]	7 mm
H	Total hook root depth (total claw depth H) [mm]	20 mm
L	Total claw thickness (L+1mm) [mm]: (claw distance to base surface)	6 mm
Tmax	Max. torque [Nm]	75 Nm
Fmax	Max. tractive force [t]	4 t
Fmax	Max. tensile force [kN]	40 kN

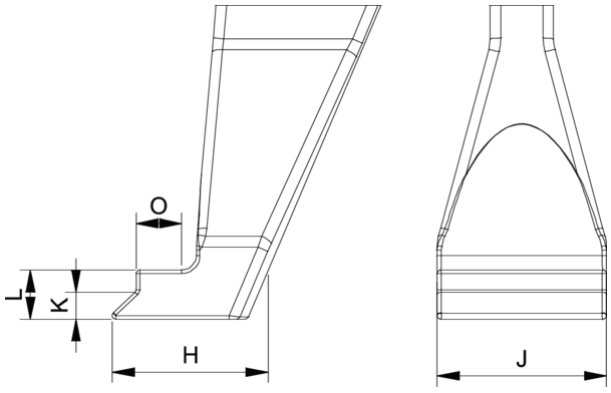

Abbreviation	Attribut	Wert
X	Total width [mm]	190 mm
Y	Total depth [mm]	64 mm
Z	Total height [mm]	155 mm
A	Clamping depth of external puller [mm]	100 mm
S1	Width across flats [mm]	22 mm
Cmin	Span outside pull-off (min.) [mm]	26 mm
Cmax	Span outside pull-off (max.) [mm]	90 mm

K	Hook root thickness at the tip (claw thickness K) [mm]	3 mm
J	Hook base width (claw width J) [mm]	24 mm
O	Hook base depth usable (claw depth usable O) [mm]	7 mm
H	Total hook root depth (total claw depth H) [mm]	20 mm
L	Total claw thickness (L+1mm) [mm]: (claw distance to base surface)	6 mm
Tmax	Max. torque [Nm]	75 Nm
Fmax	Max. tractive force [t]	4 t
Fmax	Max. tensile force [kN]	40 kN

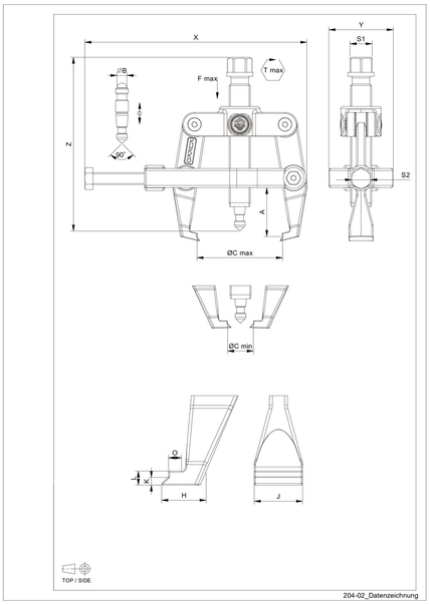

Abbreviation	Attribut	Wert
X	Total width [mm]	190 mm
Y	Total depth [mm]	64 mm
Z	Total height [mm]	155 mm
A	Clamping depth of external puller [mm]	100 mm
S1	Width across flats [mm]	22 mm
Cmin	Span outside pull-off (min.) [mm]	26 mm
Cmax	Span outside pull-off (max.) [mm]	90 mm
K	Hook root thickness at the tip (claw thickness K) [mm]	3 mm
J	Hook base width (claw width J) [mm]	24 mm
O	Hook base depth usable (claw depth usable O) [mm]	7 mm
H	Total hook root depth (total claw depth H) [mm]	20 mm
L	Total claw thickness (L+1mm) [mm]: (claw distance to base surface)	6 mm
Tmax	Max. torque [Nm]	75 Nm
Fmax	Max. tractive force [t]	4 t
Fmax	Max. tensile force [kN]	40 kN