4-SP-P Jaws with adjustable length (pair)



DESCRIPTION

The pair of two height-adjustable puller jaws is suitable for 2-jaw pullers. The robust puller jaws guarantee a particularly safe removal of bearings, gears, and discs.

APPLICATION AREA

Accessories for particularly safe removal of bearings, gears, and discs.

BENEFIT

- With the free-moving, sliding puller jaws on the crossbar, eccentric components can also be removed.

MASTER DATA

GTIN [GTIN]	4021176004636
Country of origin	DE
Material	Tool steel
Series	SP-P
Gross weight [kg]	8,965 kg
Package contents	1 few
Packaging Act	PAPPE PAP 21
Worldwide sales capability	Yes (REACH, RoHS, POP, PROP65, TSCA)

SPARE PARTS

- 4-SP-E-1_Hook only for 4-Sp

DETAIL IMAGE

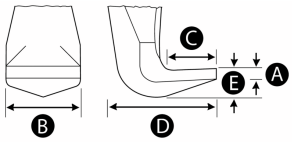

Jaws with adjustable length (pair)

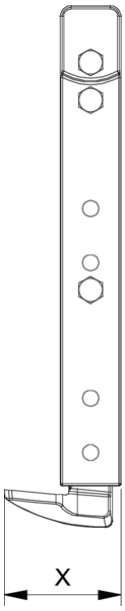

Abbreviation	Attribut	Wert
A	Clamping depth of external puller [mm]	500 mm
K	Hook root thickness at the tip (claw thickness K) [mm]	7 mm
J	Hook base width (claw width J) [mm]	45 mm
O	Hook base depth usable (claw depth usable O) [mm]	50 mm
H	Total hook root depth (total claw depth H) [mm]	85 mm
L	Total claw thickness (L+1mm) [mm]: (claw distance to base surface)	25 mm
Z	Total length [mm]	565 mm

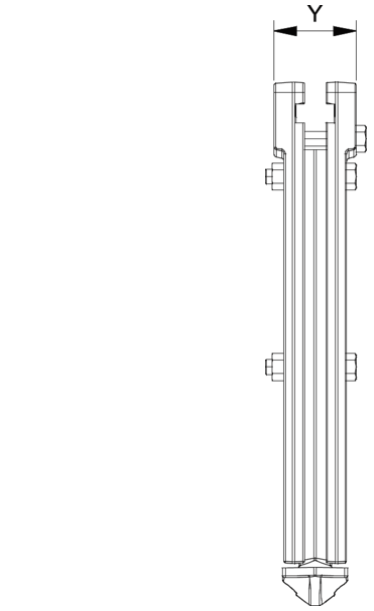

Abbreviation	Attribut	Wert
A	Clamping depth of external puller [mm]	500 mm
K	Hook root thickness at the tip (claw thickness K) [mm]	7 mm
J	Hook base width (claw width J) [mm]	45 mm
O	Hook base depth usable (claw depth usable O) [mm]	50 mm
H	Total hook root depth (total claw depth H) [mm]	85 mm
L	Total claw thickness (L+1mm) [mm]: (claw distance to base surface)	25 mm
Z	Total length [mm]	565 mm

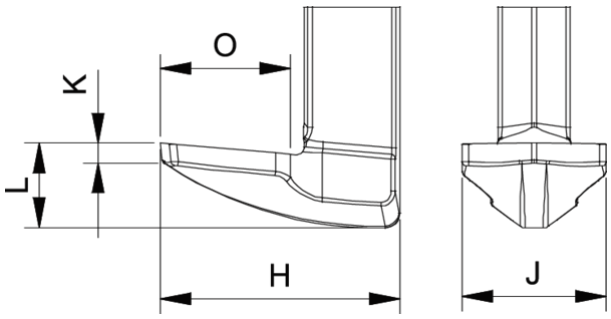

Abbreviation	Attribut	Wert
A	Clamping depth of external puller [mm]	500 mm
K	Hook root thickness at the tip (claw thickness K) [mm]	7 mm
J	Hook base width (claw width J) [mm]	45 mm
O	Hook base depth usable (claw depth usable O) [mm]	50 mm
H	Total hook root depth (total claw depth H) [mm]	85 mm
L	Total claw thickness (L+1mm) [mm]: (claw distance to base surface)	25 mm
Z	Total length [mm]	565 mm

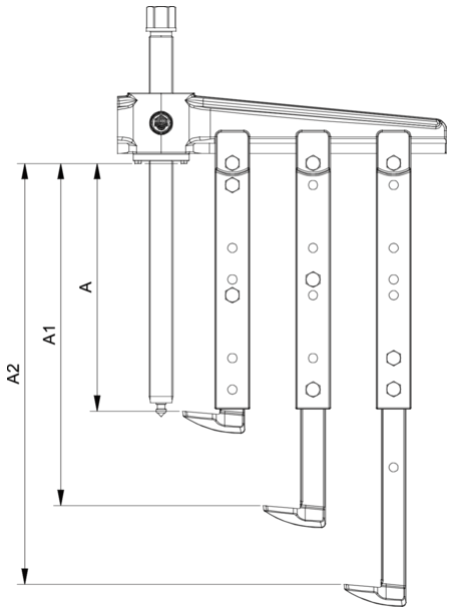

Abbreviation	Attribut	Wert
A	Clamping depth of external puller [mm]	500 mm
K	Hook root thickness at the tip (claw thickness K) [mm]	7 mm
J	Hook base width (claw width J) [mm]	45 mm
O	Hook base depth usable (claw depth usable O) [mm]	50 mm
H	Total hook root depth (total claw depth H) [mm]	85 mm
L	Total claw thickness (L+1mm) [mm]: (claw distance to base surface)	25 mm

Z	T	565 mm

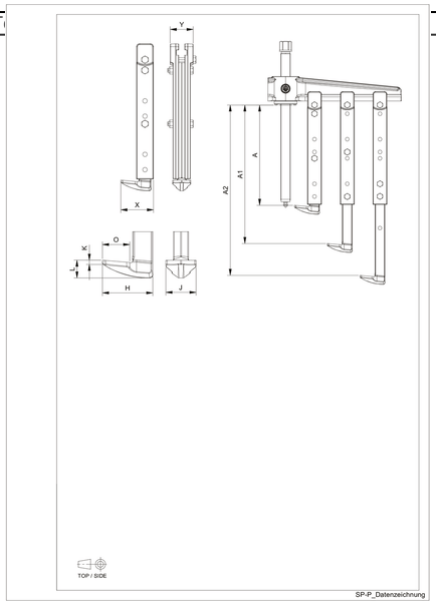

Abbreviation	Attribut	Wert
A	Clamping depth of external puller [mm]	500 mm
K	Hook root thickness at the tip (claw thickness K) [mm]	7 mm
J	Hook base width (claw width J) [mm]	45 mm
O	Hook base depth usable (claw depth usable O) [mm]	50 mm
H	Total hook root depth (total claw depth H) [mm]	85 mm
L	Total claw thickness (L+1mm) [mm]: (claw distance to base surface)	25 mm
Z	Total length [mm]	565 mm