# D-koppeling G1/4 T6 | Mondolfo Ferro 3-00460

Mondolfo Ferro Aquila AS 943 · 2025 · Tekening 8 · positie 25

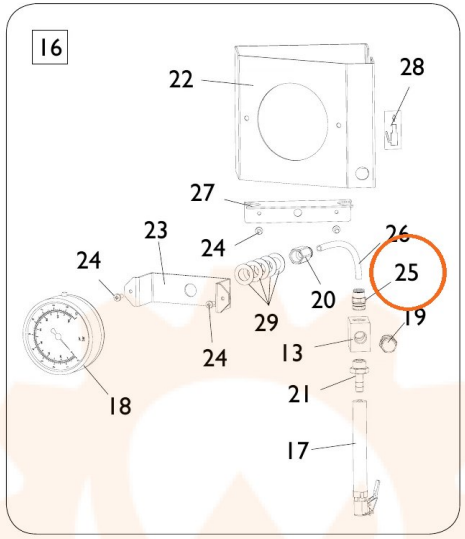
16
22
28
27
23
24
24
26
25
20
29
19
13
24
18
21
17

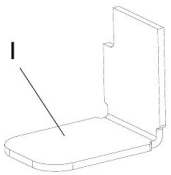
1

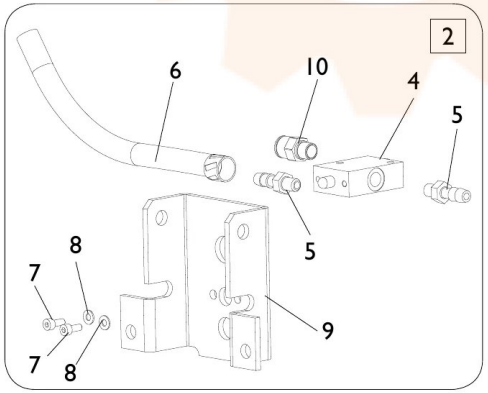
2
6
10
4
5
5
8
7
9
7
8

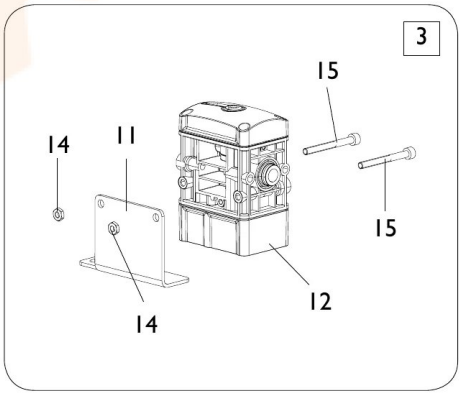
3
15
14
11
15
12
14