Klem | Mondolfo Ferro TC-E-5130000

Mondolfo Ferro Titan XC 3200 3600 4000C · 2020 · Overzichtstekening · positie 6

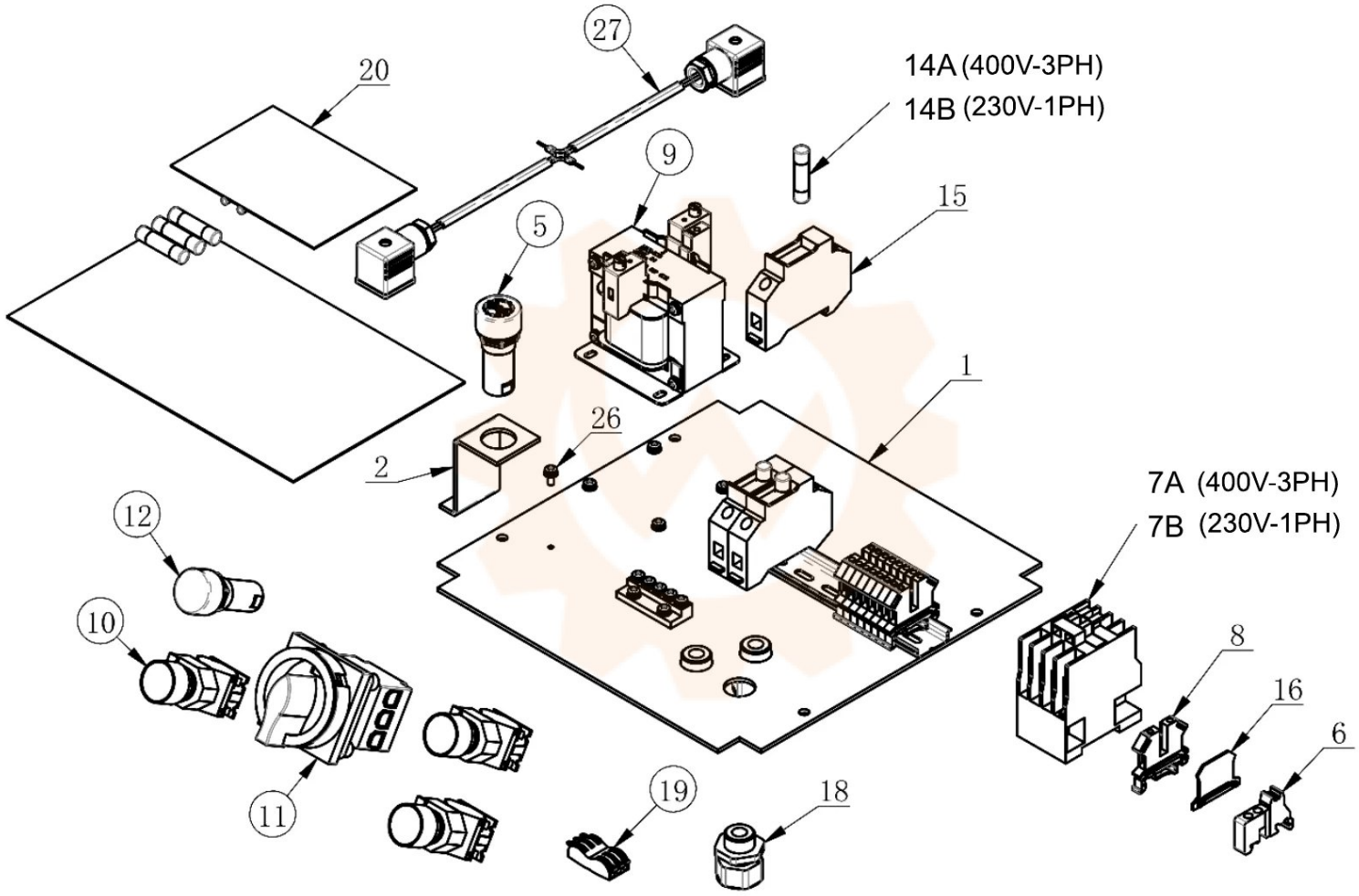
27
20
14A (400V-3PH)
14B (230V-1PH)
9
15
5
1
26
2
7A (400V-3PH)
7B (230V-1PH)
12
10
8
16
6
11
19
18