208-01 2-jaw tab puller "Economy" with oscillating, height-adjustable jaws, up to 170 mm spread, 95 mm reach



DESCRIPTION

The 2-jaw puller "Economy" with oscillating and height-adjustable jaws is used for pulling bearings, gears, and discs in all common sizes for crafts, workshops, and industry. The oscillating and curved jaws adapt to any installation situation and are universally applicable due to the adjustable reach and spread.

APPLICATION AREA

For removing bearings, gears, and discs in all common sizes for crafts, workshop, and industry.

BENEFIT

- Adjustable puller jaws for individual adaptation of the reach due to multiple drilling in the puller jaws.
- Oscillating puller jaws offer a variety of adjustment options.
- Safe installation of the spindle with a rotatable spindle tip on both smooth surfaces and during centering (Switch Technology)
- Anti-slip safety (spindle neck) at the spindle head for safe working with a wrench.
- Spindle outlet for thread protection

OPERATION

- Position the puller jaws from the outside onto the part to be removed
- Swing the jaws under the component
- Manually pull the spindle to fix it in place
- Use a ratchet or a ring spanner to turn the hexagon at the spindle head until the component is loosened

MASTER DATA

GTIN [GTIN]	4021176432408
Country of origin	DE
Material	Tool steel
Series	208
Gross weight [kg]	1 kg
Package contents	1 piece
Packaging Act	PAPPE PAP 21
Worldwide sales capability	Yes (REACH, RoHS, POP, PROP65, TSCA)

APPLICATION IMAGE



DETAIL IMAGE



SPARE PARTS

- 201-1-T_Crossbar
- 208-01-125-P_2 puller (pair)
- 614160_Mechanical pressure spindle

2-jaw tab puller "Economy" with oscillating, height-adjustable jaws, up to 170 mm spread, 95 mm reach

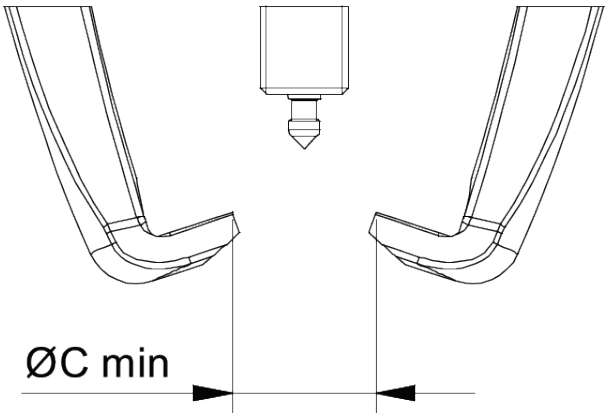

Abbreviation	Attribut	Wert
X	Total width [mm]	196 mm
Y	Total depth [mm]	30 mm
Z	Total height [mm]	181 mm
A	Clamping depth of external puller [mm]	95 mm
S1	Width across flats [mm]	17 mm
Cmin	Span outside pull-off (min.) [mm]	0 mm
Cmax	Span outside pull-off (max.) [mm]	170 mm
K	Hook root thickness at the tip (claw thickness K) [mm]	3,5 mm
J	Hook base width (claw width J) [mm]	16 mm
O	Hook base depth usable (claw depth usable O) [mm]	13 mm
H	Total hook root depth (total claw depth H) [mm]	26 mm
L	Total claw thickness (L+1mm) [mm]: (claw distance to base surface)	10 mm
Tmax	Max. torque [Nm]	20 Nm
Fmax	Max. tractive force [t]	2 t
Fmax	Max. tensile force [kN]	20 kN

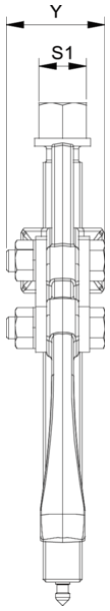

Abbreviation	Attribut	Wert
X	Total width [mm]	196 mm
Y	Total depth [mm]	30 mm
Z	Total height [mm]	181 mm
A	Clamping depth of external puller [mm]	95 mm
S1	Width across flats [mm]	17 mm
Cmin	Span outside pull-off (min.) [mm]	0 mm
Cmax	Span outside pull-off (max.) [mm]	170 mm
K	Hook root thickness at the tip (claw thickness K) [mm]	3,5 mm
J	Hook base width (claw width J) [mm]	16 mm
O	Hook base depth usable (claw depth usable O) [mm]	13 mm
H	Total hook root depth (total claw depth H) [mm]	26 mm
L	Total claw thickness (L+1mm) [mm]: (claw distance to base surface)	10 mm
Tmax	Max. torque [Nm]	20 Nm
Fmax	Max. tractive force [t]	2 t
Fmax	Max. tensile force [kN]	20 kN

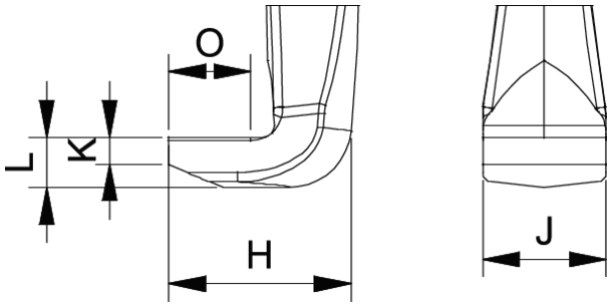

Abbreviation	Attribut	Wert
X	Total width [mm]	196 mm
Y	Total depth [mm]	30 mm
Z	Total height [mm]	181 mm
A	Clamping depth of external puller [mm]	95 mm
S1	Width across flats [mm]	17 mm
Cmin	Span outside pull-off (min.) [mm]	0 mm
Cmax	Span outside pull-off (max.) [mm]	170 mm
K	Hook root thickness at the tip (claw thickness K) [mm]	3,5 mm
J	Hook base width (claw width J) [mm]	16 mm
O	Hook base depth usable (claw depth usable O) [mm]	13 mm
H	Total hook root depth (total claw depth H) [mm]	26 mm

L	Total claw thickness (L+1mm) [mm]: (claw distance to base surface)	10 mm
Tmax	Max. torque [Nm]	20 Nm
Fmax	Max. tractive force [t]	2 t
Fmax	Max. tensile force [kN]	20 kN

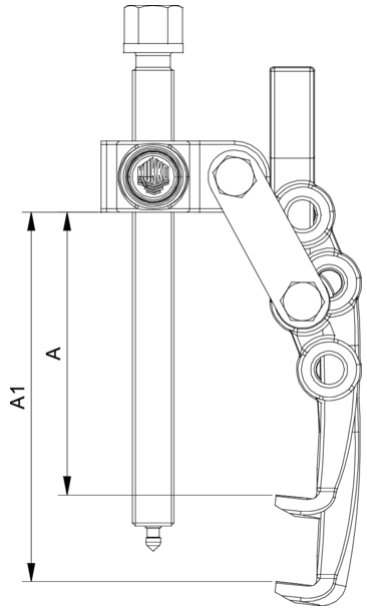

Abbreviation	Attribut	Wert
X	Total width [mm]	196 mm
Y	Total depth [mm]	30 mm
Z	Total height [mm]	181 mm
A	Clamping depth of external puller [mm]	95 mm
S1	Width across flats [mm]	17 mm
Cmin	Span outside pull-off (min.) [mm]	0 mm
Cmax	Span outside pull-off (max.) [mm]	170 mm
K	Hook root thickness at the tip (claw thickness K) [mm]	3,5 mm
J	Hook base width (claw width J) [mm]	16 mm
O	Hook base depth usable (claw depth usable O) [mm]	13 mm
H	Total hook root depth (total claw depth H) [mm]	26 mm
L	Total claw thickness (L+1mm) [mm]: (claw distance to base surface)	10 mm
Tmax	Max. torque [Nm]	20 Nm
Fmax	Max. tractive force [t]	2 t
Fmax	Max. tensile force [kN]	20 kN

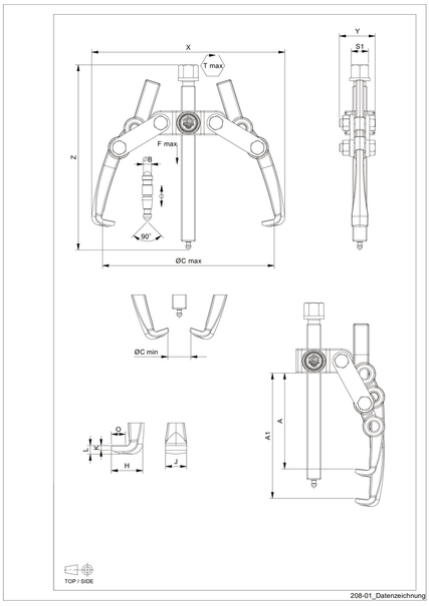

Abbreviation	Attribut	Wert
X	Total width [mm]	196 mm
Y	Total depth [mm]	30 mm
Z	Total height [mm]	181 mm
A	Clamping depth of external puller [mm]	95 mm
S1	Width across flats [mm]	17 mm
Cmin	Span outside pull-off (min.) [mm]	0 mm
Cmax	Span outside pull-off (max.) [mm]	170 mm
K	Hook root thickness at the tip (claw thickness K) [mm]	3,5 mm
J	Hook base width (claw width J) [mm]	16 mm
O	Hook base depth usable (claw depth usable O) [mm]	13 mm
H	Total hook root depth (total claw depth H) [mm]	26 mm
L	Total claw thickness (L+1mm) [mm]: (claw distance to base surface)	10 mm
Tmax	Max. torque [Nm]	20 Nm
Fmax	Max. tractive force [t]	2 t
Fmax	Max. tensile force [kN]	20 kN