| CORGHI | A 9212 T.I | Fig. D1 | 05 / 00 | Pedaliera pneumatica |
|---|---|---|---|---|

**PANZITTA SALES & SERVICE**
**72 George Avenue**
**Wilkes-Barre, PA 18705**
**570-822-6720 800-822-6720**
**www.panzittasales.com**

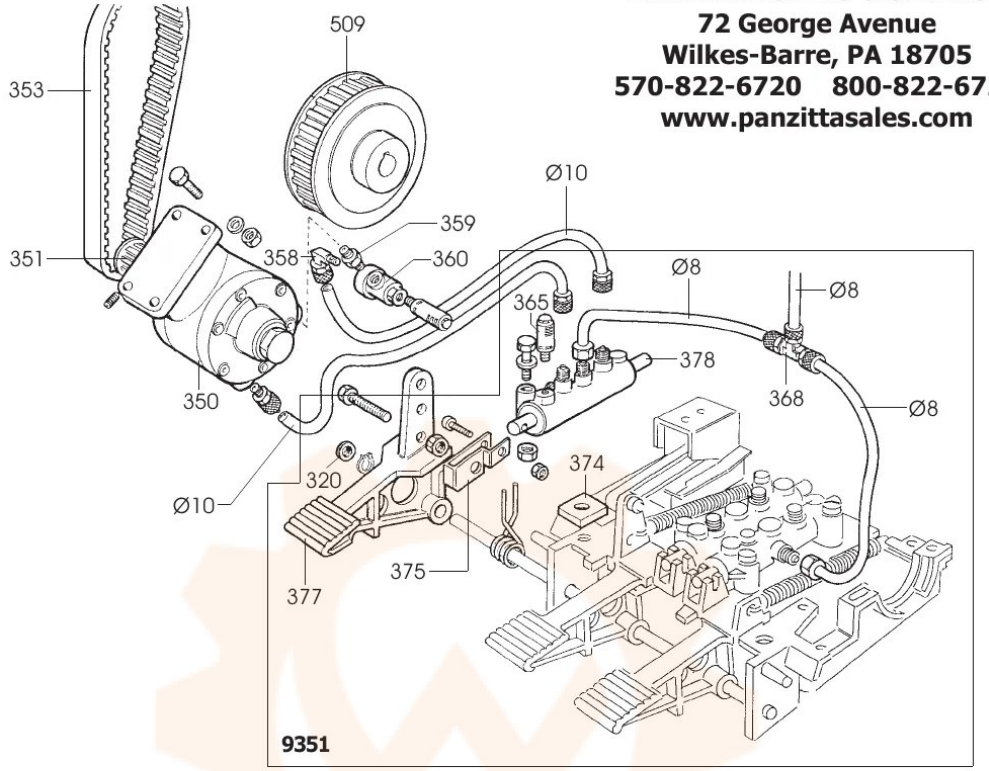


| | | | | | |
|---|---|---|---|---|---|
| Ø8 | 900701683 | TUBO | PIPE | ROHR | TUYAU |
| Ø10 | 900701875 | TUBO | PIPE | ROHR | TUYAU |
| 0350 | 900319135 | MOTORE | MOTOR | MOTOR | MOTEUR |
| 0351 | 900319076 | PULEGGIA | PULLEY | RIEMENSCHEIBE | POULIE |
| 0353 | 900425238 | CINGHIA | BELT | RIEMEN | COURROIE |
| 0358 | 900418350 | RACCORDO | CONNECTOR | ANSCHLUSS | RACCORD |
| 0359 | 900419142 | NIPPLO | CONNECTION | NIPPEL | NIPPLE |
| 0360 | 900419141 | VALVOLA | VALVE | VENTIL | VANNE |
| 0509 | 900319073 | PULEGGIA | PULLEY | RIEMENSCHEIBE | POULIE |

| **9351** | **900270526** | **PEDALIERA** | **CONTROL PEDAL** | **PEDALERIE** | **GR.PEDALES** |
|---|---|---|---|---|---|
| 0320 | 900452011 | BOCCOLA | BUSHING | LAGER | DOUILLE |
| 0365 | 900422682 | SILENZIATORE | SILENCER | SCHALLDAEMPFER | SILENCIEUX |
| 0368 | 900415860 | RACCORDO | CONNECTOR | ANSCHLUSS | RACCORD |
| 0374 | 900329058 | PIASTRINA | PLATE | PLAETTCHEN | PLAQUETTE |
| 0375 | 900331381 | BIELLA | TRACE | PLEUELSTANGE | BIELLE |
| 0377 | 900352029 | PEDALE | PEDAL | PEDAL | PEDALE |
| 0378 | 900258456 | RUBINETTO | COCK | HAHN | ROBINET |