Fitting G3/8F | Mondolfo Ferro 3-01950

Mondolfo Ferro Nitronic 300 - 500 - 1800 - 2000 · 2017 · Tekening 1 · positie 17

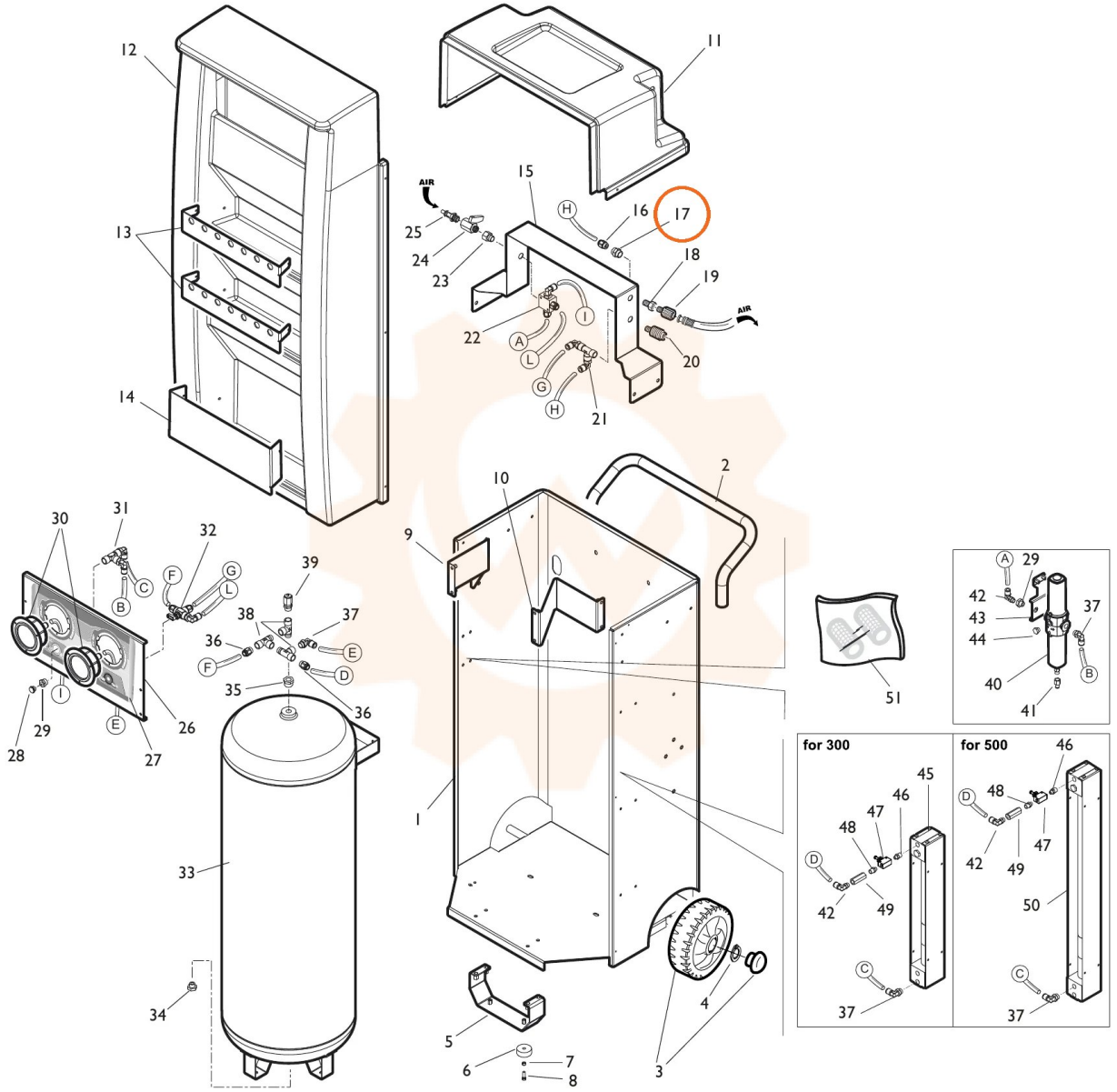
for 300
for 500