Drukknop | Mondolfo Ferro TC-E-27A0200

Mondolfo Ferro Titan XC2036T XC2040T E · 2020 · Tekening 10 · positie 10

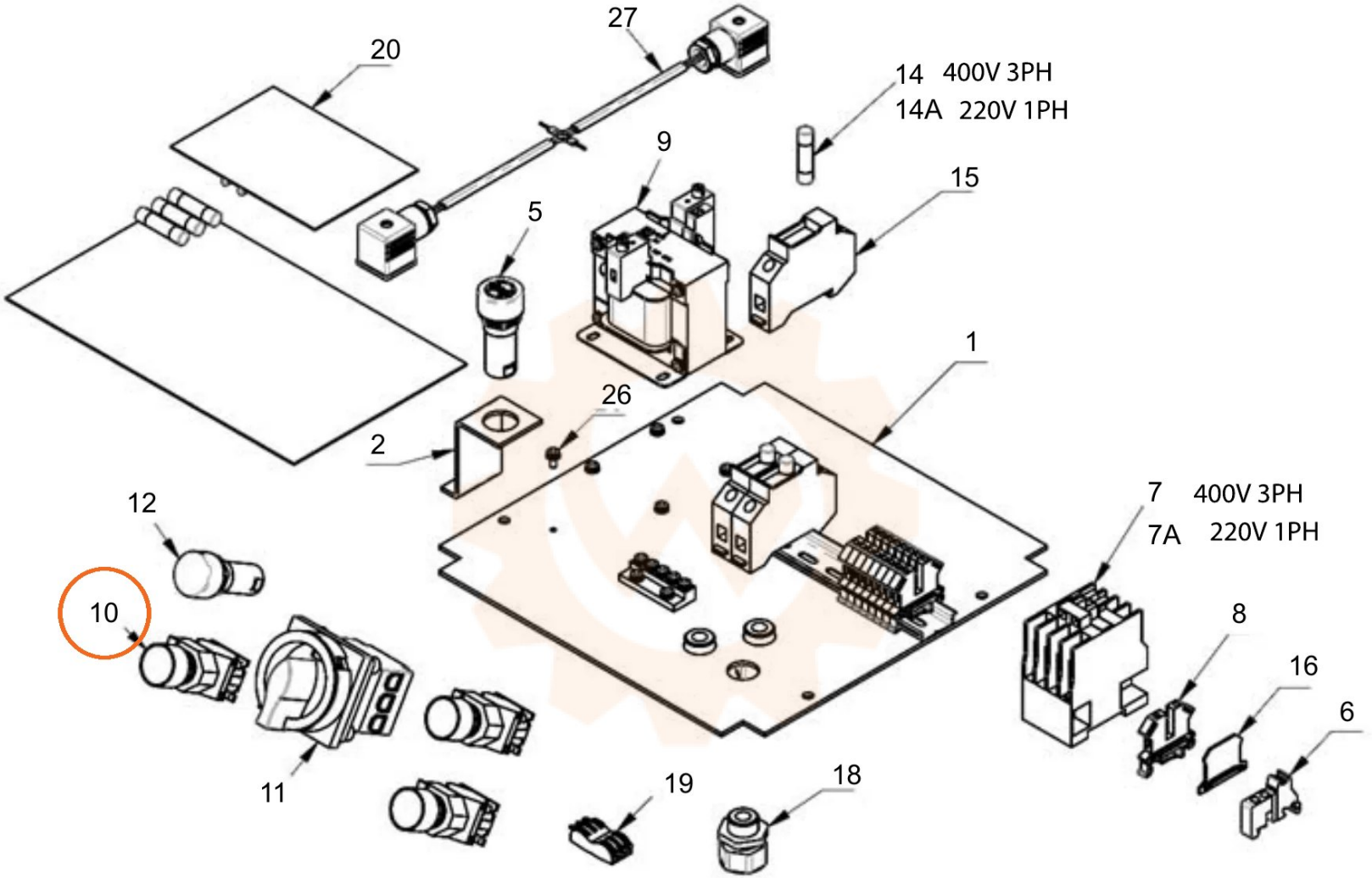
27
20
14 400V 3PH
14A 220V 1PH
9
15
5
1
26
2
12
7 400V 3PH
7A 220V 1PH
10
8
16
6
11
19
18