CORGHI	A 9212 T.I	Fig. D	11 / 99	Pedaliera

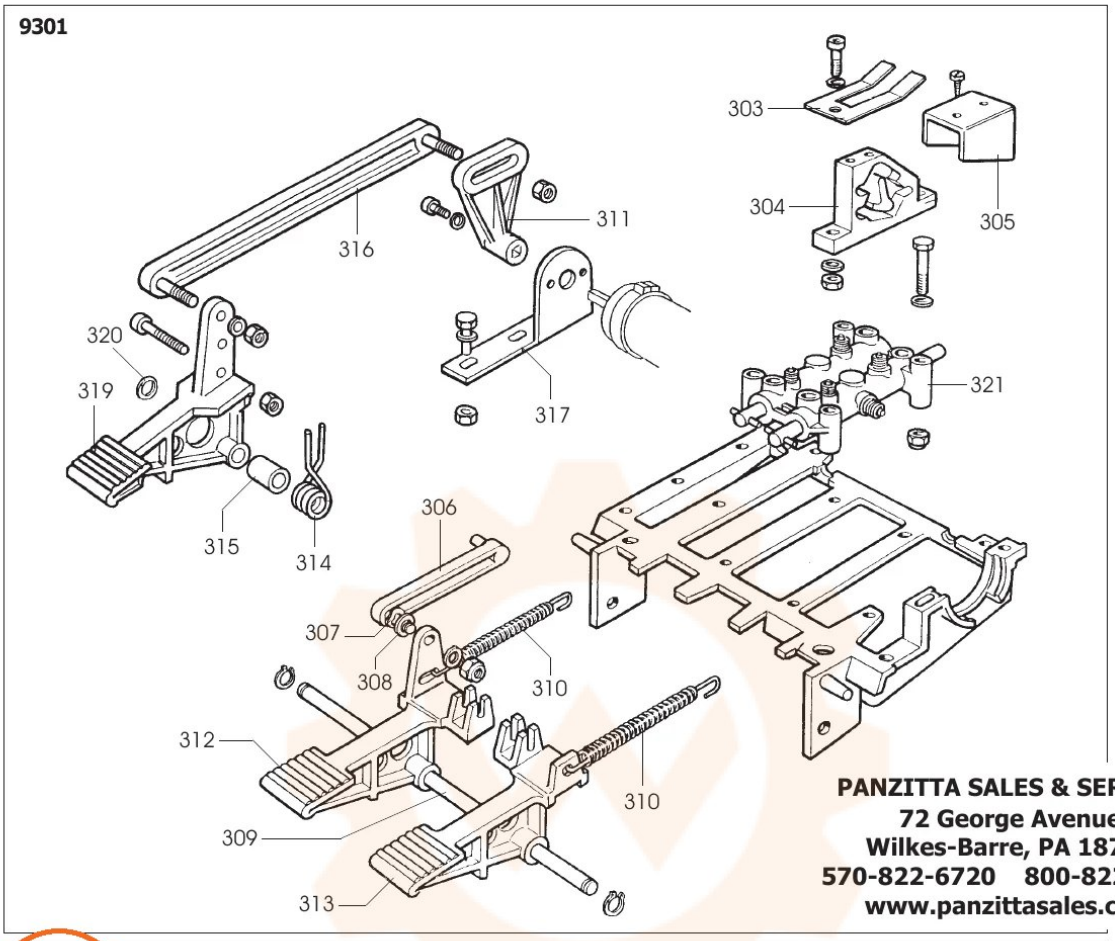

PANZITTA SALES & SERVICE
72 George Avenue
Wilkes-Barre, PA 18705
570-822-6720 800-822-6720
www.panzittasales.com

9301	900241201	PEDALIERA	CONTROL PEDAL	PEDALERIE	GR.PEDALES
0303	900325019	BALESTRA	LEAF SPRING	BLATTFEDER	RESSORT A LAMES
0304	900425020	CAMMA	CAM	NOCKEN	CAME
0305	900325018	CAVALLOTTO	U-BOLT	BUEGELBOLZEN	CRAMPILLON
0306	900425014	BIELLA	TRACE	PLEUELSTANGE	BIELLE
0307	900419888	RONDELLA	WASHER	UNTERLEGSCHEIBE	RONDELLE
0308	900309358	RONDELLA	WASHER	UNTERLEGSCHEIBE	RONDELLE
0309	900325583	PERNO	PIN	ZAPFEN	PIVOT
0310	900410628	MOLLA	SPRING	FEDER	RESSORT
0311	900404283	LEVA	LEVER	HEBEL	LEVIER
0312	900325031	PEDALE	PEDAL	PEDAL	PEDALE
0313	900325032	PEDALE	PEDAL	PEDAL	PEDALE
0314	900428682	MOLLA	SPRING	FEDER	RESSORT
0315	900325050	DISTANZIALE	SPACER	ABSTANDSSTUECK	ENTRETOISE
0316	900429009	BIELLA	TRACE	PLEUELSTANGE	BIELLE
0317	900334758	SUPPORTO	SUPPORT	LAGER	SUPPORT
0319	900352009	PEDALE	PEDAL	PEDAL	PEDALE
0320	900452011	BOCCOLA	BUSHING	LAGER	DOUILLE
0321	900253298	RUBINETTO	COCK	HAHN	ROBINET