Zeskantmoer M12 | Mondolfo Ferro 2-00153

Mondolfo Ferro AS914 TI · 2026 · Tekening 6 · positie 24

FINO A MATR. / UP TO S/N CSF014921

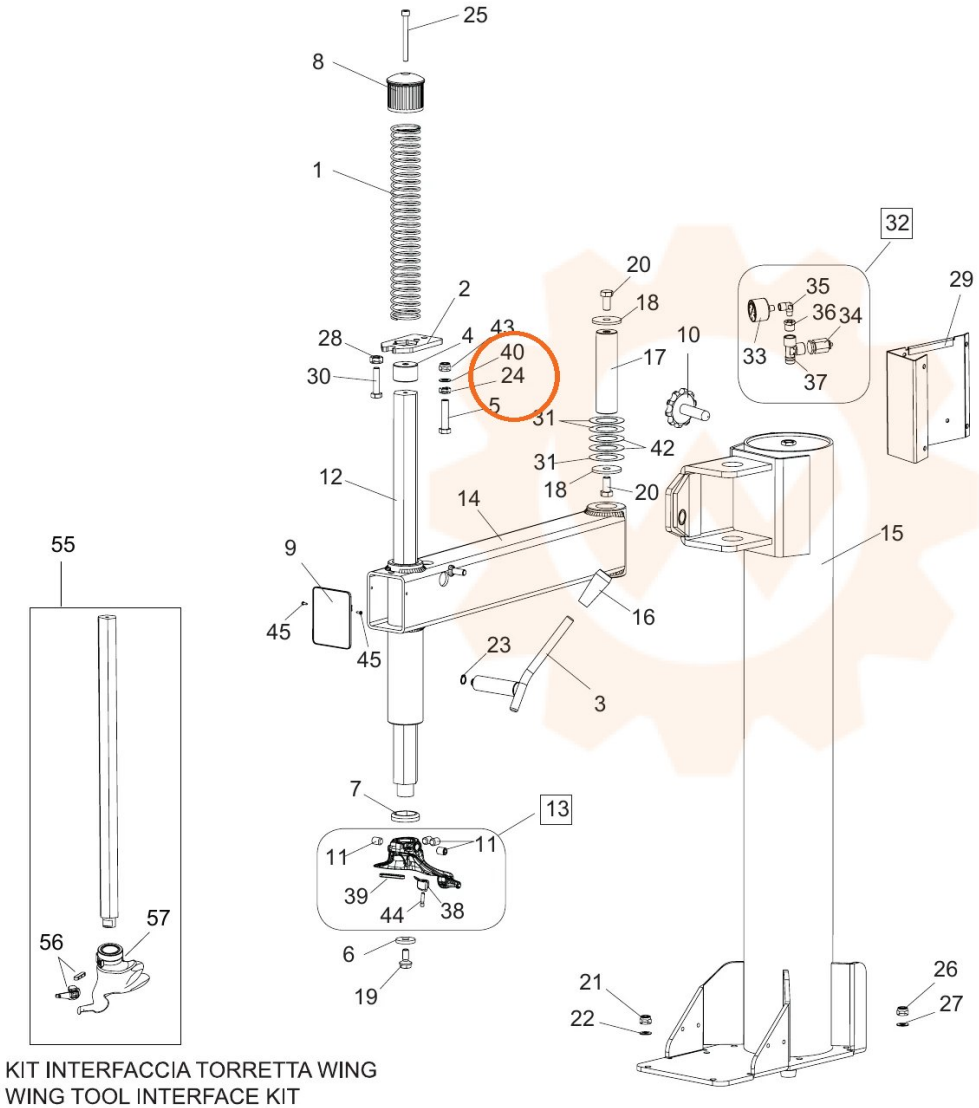

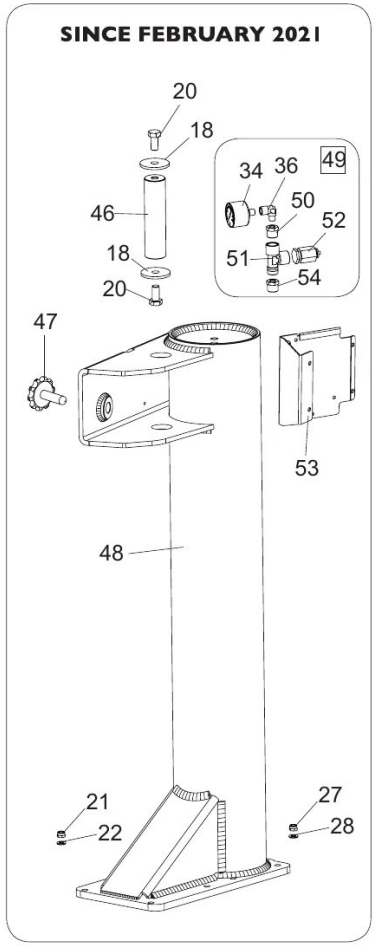

KIT INTERFACCIA TORRETTA WING
WING TOOL INTERFACE KIT