45-8 3-jaw industrial puller with force-amplifying, self-centering jaws, up to 650 mm spread, 500 mm reach



DESCRIPTION

The handy, 3-jaw industrial puller with force-amplifying and self-centering jaws is used for pulling off bearings, gears and discs in all common sizes for trades, workshops and industry. This makes it possible to remove any component that sits on a shaft and is freely accessible from the outside. When spindle pressure is applied, the part to be pulled off is gripped ever more tightly by the interconnected jaws. The 3-jaw design guarantees even load distribution and therefore a particularly secure hold on the part to be pulled off.

APPLICATION AREA

To detach bearings, gears, and discs in all common sizes for crafts, workshops, and industry.

BENEFIT

- Self-centering of the jaws through manual tightening of the spindle (Autogrip Technology)
- Safe positioning of the spindle through a rotatable spindle tip on both smooth surfaces and during centerings (Switch Technology)
- 3-jaw ensures an even force distribution and allows for greater pulling forces.
- Anti-slip safety (spindle neck) at the spindle head for safe working with a wrench.
- Spindle outlet to protect the thread

OPERATION

- Position the puller jaws from the outside onto the part to be removed
- Swing the claws under the component
- Manually pull the spindle for fixation
- Move the hexagon on the spindle head with a ratchet or a ring spanner until the component is loosened

MASTER DATA

GTIN [GTIN]	4021176007149
Country of origin	DE
Material	Tool steel
Series	45
Gross weight [kg]	19,71 kg
Package contents	1 piece
Packaging Act	PAPPE PAP 21
Worldwide sales capability	Yes (REACH, RoHS, POP, PROP65, TSCA)

SPARE PARTS

- 633370_Double-sided spindle tip

APPLICATION IMAGE



DETAIL IMAGE



3-jaw industrial puller with force-amplifying, self-centering jaws, up to 650 mm spread, 500 mm reach

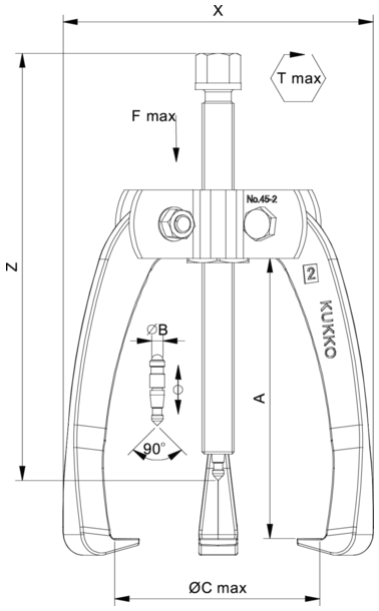

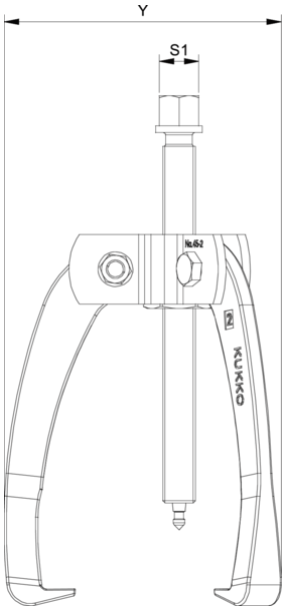

Abbreviation	Attribut	Wert
X	Total width [mm]	490 mm
Y	Total depth [mm]	490 mm
Z	Total height [mm]	700 mm
A	Clamping depth of external puller [mm]	500 mm
S1	Width across flats [mm]	36 mm
Cmin	Span outside pull-off (min.) [mm]	100 mm
Cmax	Span outside pull-off (max.) [mm]	650 mm
K	Hook root thickness at the tip (claw thickness K) [mm]	6 mm
J	Hook base width (claw width J) [mm]	32 mm
O	Hook base depth usable (claw depth usable O) [mm]	31 mm
H	Total hook root depth (total claw depth H) [mm]	73 mm
L	Total claw thickness (L+1mm) [mm]: (claw distance to base surface)	30 mm
Tmax	Max. torque [Nm]	450 Nm
Fmax	Max. tractive force [t]	15 t
Fmax	Max. tensile force [kN]	150 kN

Abbreviation	Attribut	Wert
X	Total width [mm]	490 mm
Y	Total depth [mm]	490 mm
Z	Total height [mm]	700 mm
A	Clamping depth of external puller [mm]	500 mm
S1	Width across flats [mm]	36 mm
Cmin	Span outside pull-off (min.) [mm]	100 mm
Cmax	Span outside pull-off (max.) [mm]	650 mm
K	Hook root thickness at the tip (claw thickness K) [mm]	6 mm
J	Hook base width (claw width J) [mm]	32 mm
O	Hook base depth usable (claw depth usable O) [mm]	31 mm
H	Total hook root depth (total claw depth H) [mm]	73 mm
L	Total claw thickness (L+1mm) [mm]: (claw distance to base surface)	30 mm
Tmax	Max. torque [Nm]	450 Nm
Fmax	Max. tractive force [t]	15 t
Fmax	Max. tensile force [kN]	150 kN

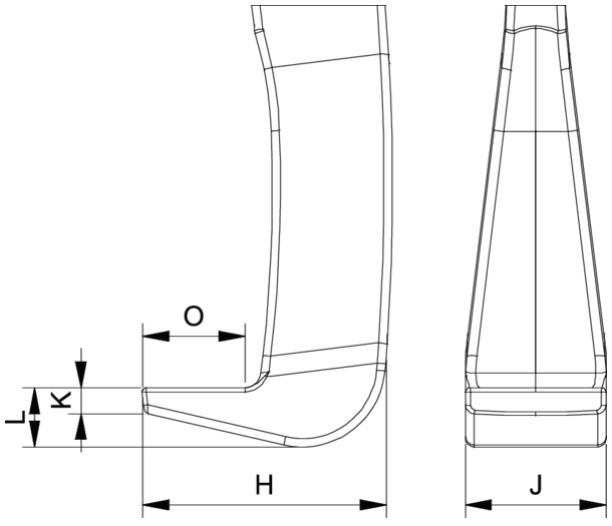

Abbreviation	Attribut	Wert
X	Total width [mm]	490 mm

Y	Total depth [mm]	490 mm
Z	Total height [mm]	700 mm
A	Clamping depth of external puller [mm]	500 mm
S1	Width across flats [mm]	36 mm
Cmin	Span outside pull-off (min.) [mm]	100 mm
Cmax	Span outside pull-off (max.) [mm]	650 mm
K	Hook root thickness at the tip (claw thickness K) [mm]	6 mm
J	Hook base width (claw width J) [mm]	32 mm
O	Hook base depth usable (claw depth usable O) [mm]	31 mm
H	Total hook root depth (total claw depth H) [mm]	73 mm
L	Total claw thickness (L+1mm) [mm]: (claw distance to base surface)	30 mm
Tmax	Max. torque [Nm]	450 Nm
Fmax	Max. tractive force [t]	15 t
Fmax	Max. tensile force [kN]	150 kN