204-2 2-jaw bearing puller with side clamp, up to 100 mm spread, 100 mm reach



DESCRIPTION

The 2-jaw bearing puller "Cobra" with side clamp is used for pulling particularly stuck ball bearings, bearing rings, and workpieces. With this, it is possible to loosen any component that is mounted on a shaft and is freely accessible from the outside. Thanks to the clamp, the contact pressure of the puller jaws is increased manifold. When the clamp is tightened, the sharp claws of the puller jaws grip underneath the part to be pulled off and loosen it even before the actual pulling process.

APPLICATION AREA

For extracting particularly stubborn ball bearings, bearing rings, and workpieces.

BENEFIT

- The lateral clamp ensures that the puller jaws are pressed particularly firmly against the part to be pulled off.
- The slim design of the jaws allows access to hard-to-reach places.
- Anti-slip safety (spindle neck) at the spindle head for safe working with a wrench.
- Spindle output for the protection of the thread

MASTER DATA

GTIN [GTIN]	4021176028328
Country of origin	DE
Material	Tool steel
Series	204
Gross weight [kg]	2,04 kg
Package contents	1 piece
Packaging Act	PAPPE PAP 21
Worldwide sales capability	Yes (REACH, RoHS, POP, PROP65, TSCA)

SPARE PARTS

- 204-2-100-P_2 puller (pair)
- 204-2-T_Crossbar
- 204201_clamp complete
- 621130_Mechanical spindle

APPLICATION IMAGE



DETAIL IMAGE

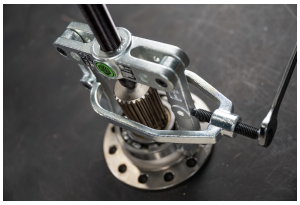

2-jaw bearing puller with side clamp, up to 100 mm spread, 100 mm reach

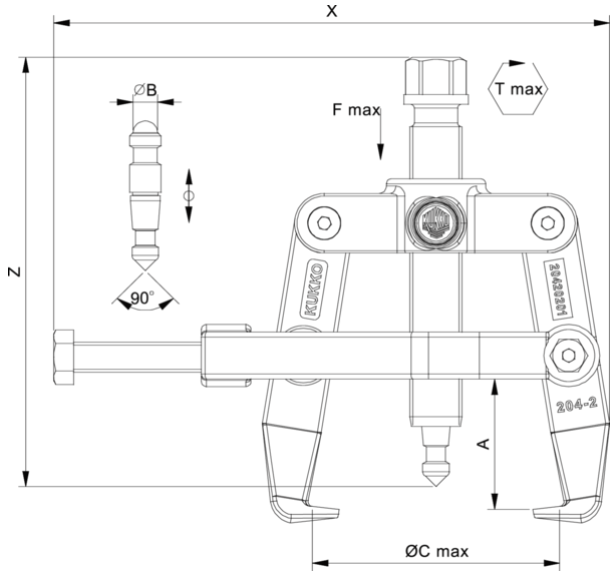

Abbreviation	Attribut	Wert
X	Total width [mm]	190 mm
Y	Total depth [mm]	64 mm
Z	Total height [mm]	155 mm
A	Clamping depth of external puller [mm]	100 mm
S1	Width across flats [mm]	22 mm
Cmin	Span outside pull-off (min.) [mm]	16 mm
Cmax	Span outside pull-off (max.) [mm]	100 mm
K	Hook root thickness at the tip (claw thickness K) [mm]	3,5 mm
J	Hook base width (claw width J) [mm]	24 mm
O	Hook base depth usable (claw depth usable O) [mm]	12 mm
H	Total hook root depth (total claw depth H) [mm]	25 mm
L	Total claw thickness (L+1mm) [mm]: (claw distance to base surface)	10 mm
Tmax	Max. torque [Nm]	120 Nm
Fmax	Max. tractive force [t]	6 t
Fmax	Max. tensile force [kN]	60 kN

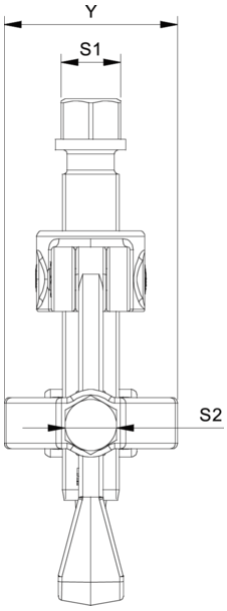

Abbreviation	Attribut	Wert
X	Total width [mm]	190 mm
Y	Total depth [mm]	64 mm
Z	Total height [mm]	155 mm
A	Clamping depth of external puller [mm]	100 mm
S1	Width across flats [mm]	22 mm
Cmin	Span outside pull-off (min.) [mm]	16 mm
Cmax	Span outside pull-off (max.) [mm]	100 mm
K	Hook root thickness at the tip (claw thickness K) [mm]	3,5 mm
J	Hook base width (claw width J) [mm]	24 mm
O	Hook base depth usable (claw depth usable O) [mm]	12 mm
H	Total hook root depth (total claw depth H) [mm]	25 mm
L	Total claw thickness (L+1mm) [mm]: (claw distance to base surface)	10 mm
Tmax	Max. torque [Nm]	120 Nm
Fmax	Max. tractive force [t]	6 t
Fmax	Max. tensile force [kN]	60 kN

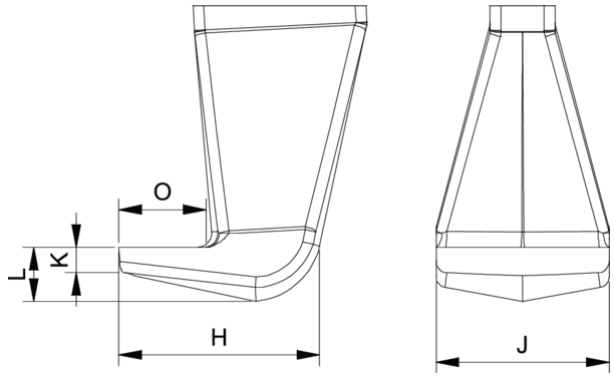

Abbreviation	Attribut	Wert
X	Total width [mm]	190 mm
Y	Total depth [mm]	64 mm
Z	Total height [mm]	155 mm
A	Clamping depth of external puller [mm]	100 mm
S1	Width across flats [mm]	22 mm
Cmin	Span outside pull-off (min.) [mm]	16 mm
Cmax	Span outside pull-off (max.) [mm]	100 mm
K	Hook root thickness at the tip (claw thickness K) [mm]	3,5 mm

J	Hook base width (claw width J) [mm]	24 mm
O	Hook base depth usable (claw depth usable O) [mm]	12 mm
H	Total hook root depth (total claw depth H) [mm]	25 mm
L	Total claw thickness (L+1mm) [mm]: (claw distance to base surface)	10 mm
Tmax	Max. torque [Nm]	120 Nm
Fmax	Max. tractive force [t]	6 t
Fmax	Max. tensile force [kN]	60 kN

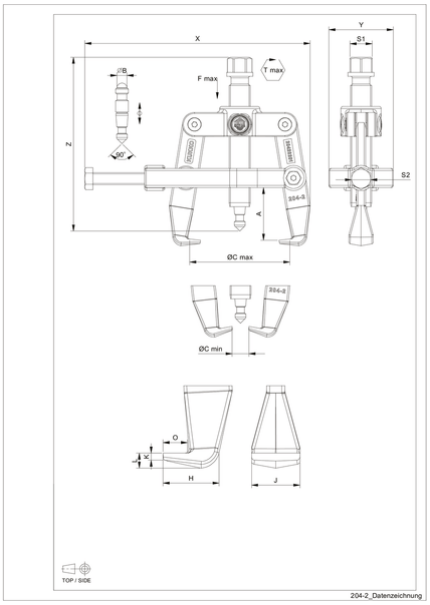

Abbreviation	Attribut	Wert
X	Total width [mm]	190 mm
Y	Total depth [mm]	64 mm
Z	Total height [mm]	155 mm
A	Clamping depth of external puller [mm]	100 mm
S1	Width across flats [mm]	22 mm
Cmin	Span outside pull-off (min.) [mm]	16 mm
Cmax	Span outside pull-off (max.) [mm]	100 mm
K	Hook root thickness at the tip (claw thickness K) [mm]	3,5 mm
J	Hook base width (claw width J) [mm]	24 mm
O	Hook base depth usable (claw depth usable O) [mm]	12 mm
H	Total hook root depth (total claw depth H) [mm]	25 mm
L	Total claw thickness (L+1mm) [mm]: (claw distance to base surface)	10 mm
Tmax	Max. torque [Nm]	120 Nm
Fmax	Max. tractive force [t]	6 t
Fmax	Max. tensile force [kN]	60 kN