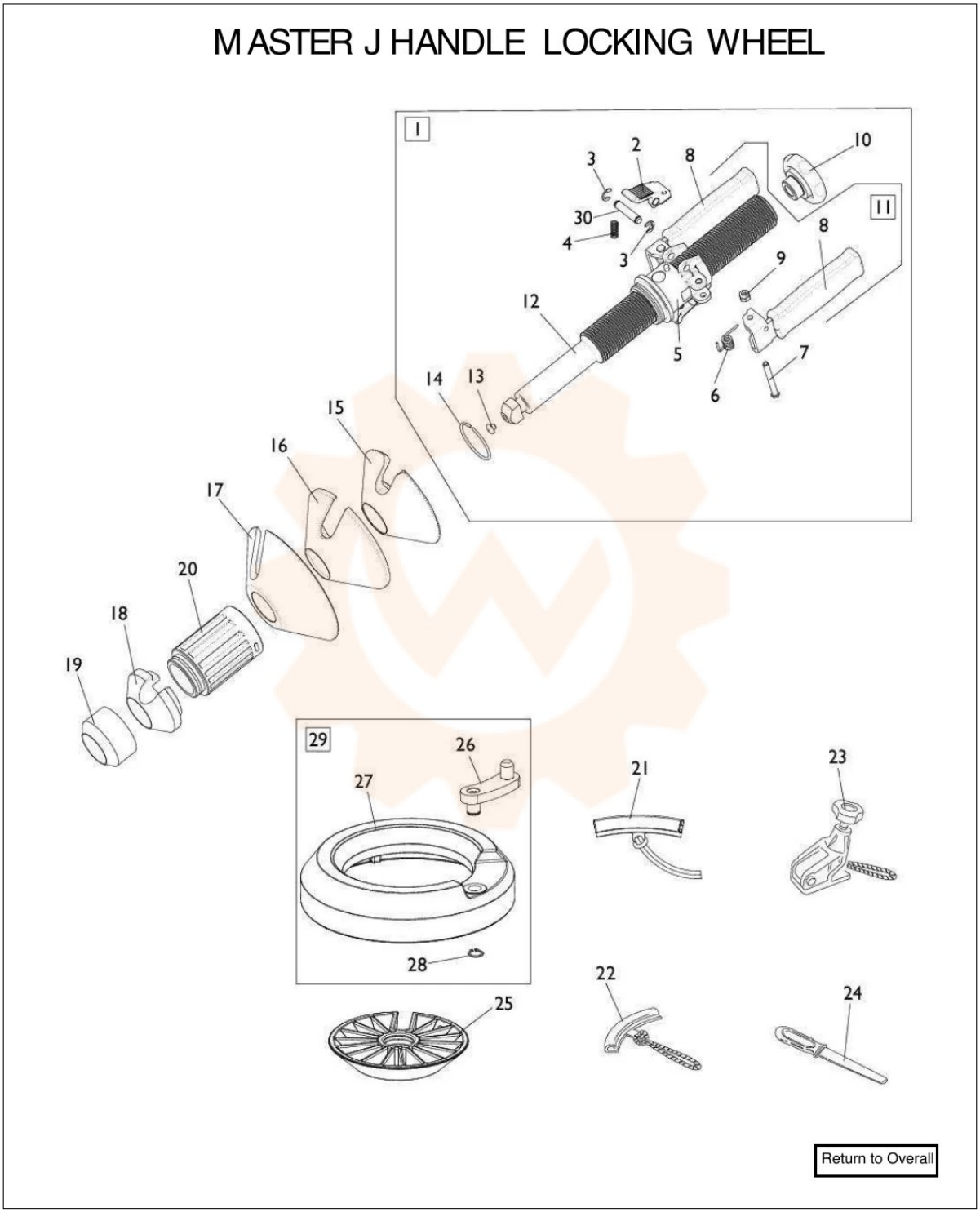
MASTER J HANDLE LOCKING WHEEL
I
II
29
1
2
3
4
5
6
7
8
9
10
11
12
13
14
15
16
17
18
19
20
21
22
23
24
25
26
27
28
30
Return to Overall