113-20 3-jaw puller for roller bearings (Swedish model) with cone knob, up to 125 mm spread, 100 mm reach



DESCRIPTION

The 3-jaw Pullers with cone knob of the series 113 have been developed for the proper removal of ball bearings in collaboration with a Scandinavian ball bearing manufacturer. Both the proportions of the Puller and the consistently straight jaws are tailored to the requirements for centrally pulling small and medium bearings in limited environments. This counteracts possible damage to the bearing and the bearing seat during removal. The springs guarantee synchronous opening and closing of the jaws, making handling easier and enabling even more efficient work. The combination of a tightened reach adjusting knob and spring element prevents the Puller from slipping, ensuring a particularly firm hold at all times. At the same time, the fixation of the jaws by the cone knob accelerates and facilitates work with constant pulling processes with identical spread. The 3-jaw construction guarantees an even load distribution and thus a particularly secure hold on the part to be removed.

APPLICATION AREA

For non-destructive removal of bearings in limited environmental conditions.

BENEFIT

- Automatic self-centering of the jaws by tightening the tension ring
- The tension ring and spring ensure a force-fitting fixation of the puller without slipping or deflection of the jaws.
- Claw-shaped leg end grasps the bearing in a form-fit manner.
- The spread only needs to be set once for identical pull-off processes.
- Anti-slip safety (spindle neck) at the spindle head for safe working with a wrench.
- Spindle outlet to protect the thread
- 3-jaw ensures an even distribution of force and allows for greater pulling forces
- Safe setup of the spindle through a swivel spindle tip on both smooth surfaces and during centering (Switch Technology)

OPERATION

- Position the spindle in the center on the shaft
- Tighten the clamping ring until the arms securely clamp the bearing
- Manually pull the spindle to secure it
- Use a ratchet or a box wrench to move the hexagon on the spindle head until the bearing is loosened

APPLICATION IMAGE



MASTER DATA

GTIN [GTIN]	4021176422423
Country of origin	DE
Material	Tool steel
Series	113
Gross weight [kg]	1,23 kg
Package contents	1 piece
Packaging Act	Rezykkat rHDPE 61
Worldwide sales capability	Yes (REACH, RoHS, POP, PROP65, TSCA)

SPARE PARTS

- 113-117_replacement spindle
- 113-20-100-S_3 jaws (set)
- 113-20-T_Crossbar
- 612140_Double-sided spindle tip
- 614160_Mechanical pressure spindle

3-jaw puller for roller bearings (Swedish model) with cone knob, up to 125 mm spread, 100 mm reach

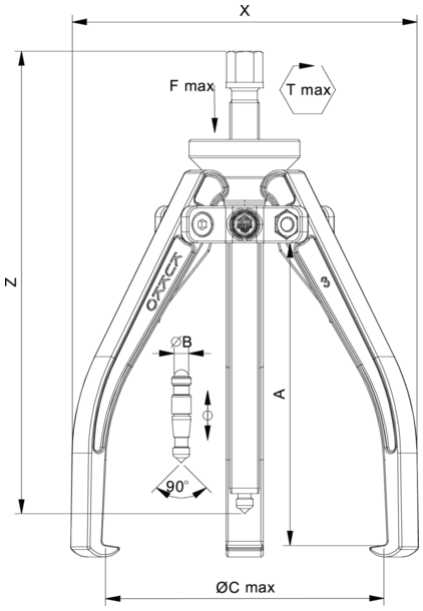

Abbreviation	Attribut	Wert
X	Total width [mm]	139 mm
Y	Total depth [mm]	139 mm
Z	Total height [mm]	181 mm
A	Clamping depth of external puller [mm]	100 mm
S1	Width across flats [mm]	17 mm
Cmin	Span outside pull-off (min.) [mm]	1 mm
Cmax	Span outside pull-off (max.) [mm]	125 mm
K	Hook root thickness at the tip (claw thickness K) [mm]	3 mm
J	Hook base width (claw width J) [mm]	15 mm
O	Hook base depth usable (claw depth usable O) [mm]	8 mm
H	Total hook root depth (total claw depth H) [mm]	15 mm
L	Total claw thickness (L+1mm) [mm]: (claw distance to base surface)	6,5 mm
Tmax	Max. torque [Nm]	45 Nm
Fmax	Max. tractive force [t]	3 t
Fmax	Max. tensile force [kN]	30 kN

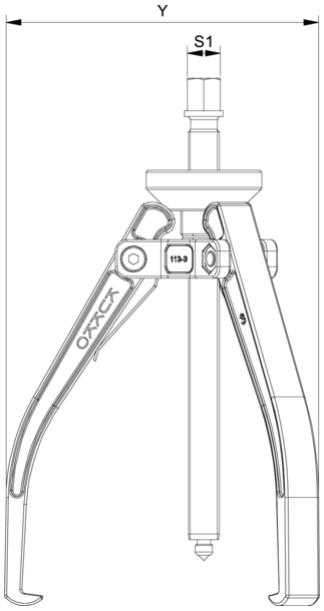

Abbreviation	Attribut	Wert
X	Total width [mm]	139 mm
Y	Total depth [mm]	139 mm
Z	Total height [mm]	181 mm
A	Clamping depth of external puller [mm]	100 mm
S1	Width across flats [mm]	17 mm
Cmin	Span outside pull-off (min.) [mm]	1 mm
Cmax	Span outside pull-off (max.) [mm]	125 mm
K	Hook root thickness at the tip (claw thickness K) [mm]	3 mm
J	Hook base width (claw width J) [mm]	15 mm
O	Hook base depth usable (claw depth usable O) [mm]	8 mm
H	Total hook root depth (total claw depth H) [mm]	15 mm
L	Total claw thickness (L+1mm) [mm]: (claw distance to base surface)	6,5 mm
Tmax	Max. torque [Nm]	45 Nm
Fmax	Max. tractive force [t]	3 t
Fmax	Max. tensile force [kN]	30 kN

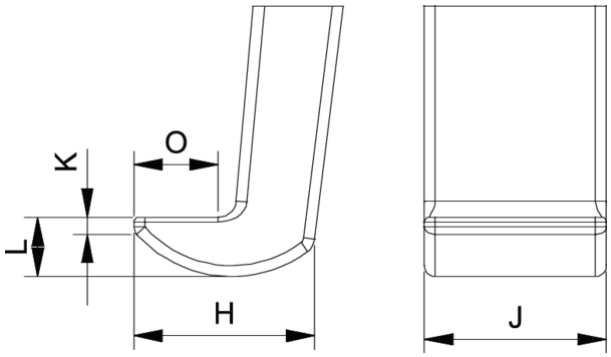

Abbreviation	Attribut	Wert
X	Total width [mm]	139 mm
Y	Total depth [mm]	139 mm
Z	Total height [mm]	181 mm
A	Clamping depth of external puller [mm]	100 mm
S1	Width across flats [mm]	17 mm
Cmin	Span outside pull-off (min.) [mm]	1 mm
Cmax	Span outside pull-off (max.) [mm]	125 mm
K	Hook root thickness at the tip (claw thickness K) [mm]	3 mm
J	Hook base width (claw width J) [mm]	15 mm

O	Hook base depth usable (claw depth usable O) [mm]	8 mm
H	Total hook root depth (total claw depth H) [mm]	15 mm
L	Total claw thickness (L+1mm) [mm]: (claw distance to base surface)	6,5 mm
Tmax	Max. torque [Nm]	45 Nm
Fmax	Max. tractive force [t]	3 t
Fmax	Max. tensile force [kN]	30 kN