Magneetventiel | Mondolfo Ferro 50-2136

Mondolfo Ferro TITANX2035T-2040T · 2022 · Tekening 4 · positie 26

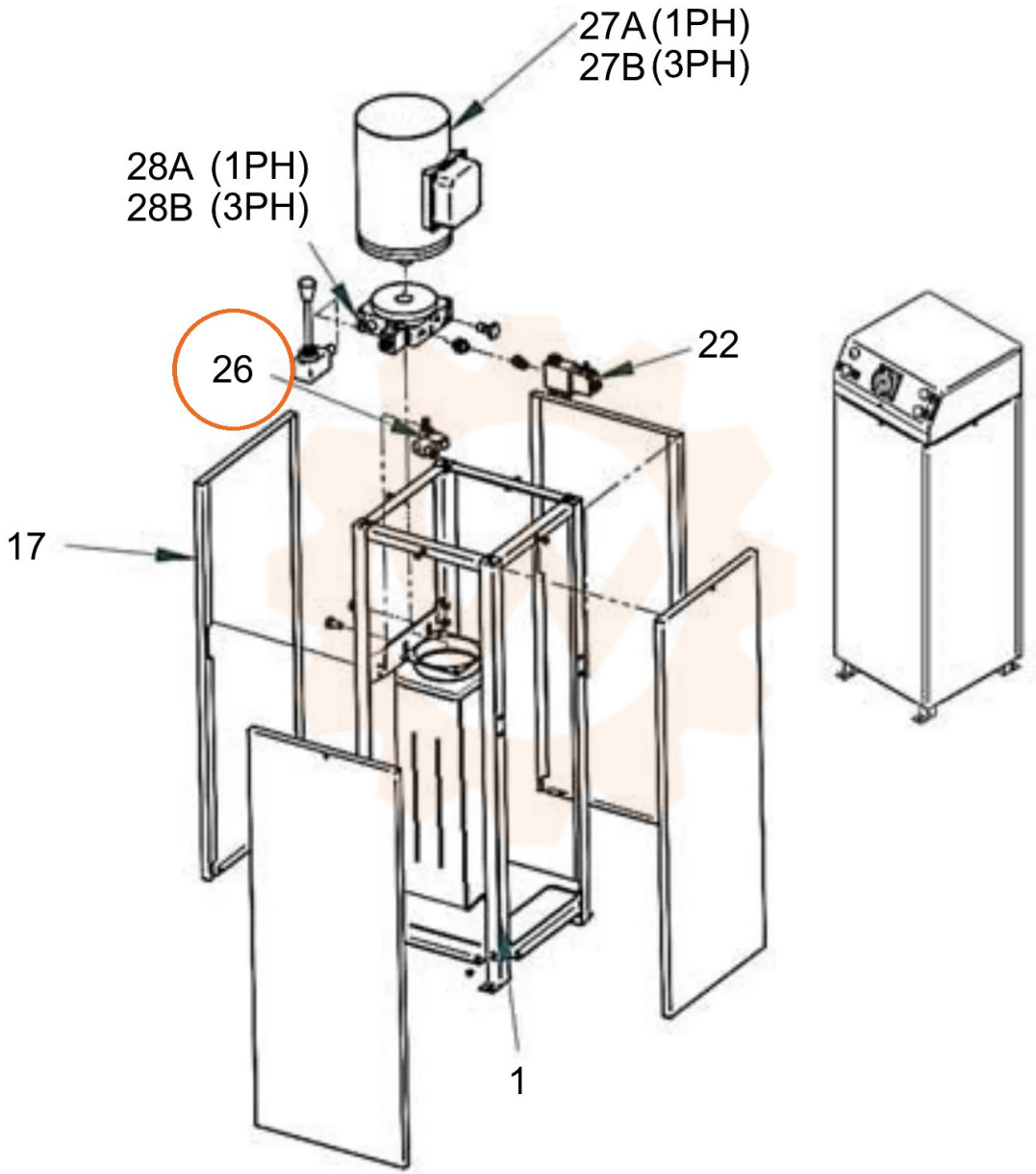
27A (1PH)
27B (3PH)
28A (1PH)
28B (3PH)
26
22
17
1