Draaikoppeling | Mondolfo Ferro CT-Q-5000000

Mondolfo Ferro Startline S524 · 2025 · Tekening 64 · positie 2

1

TI VERSION

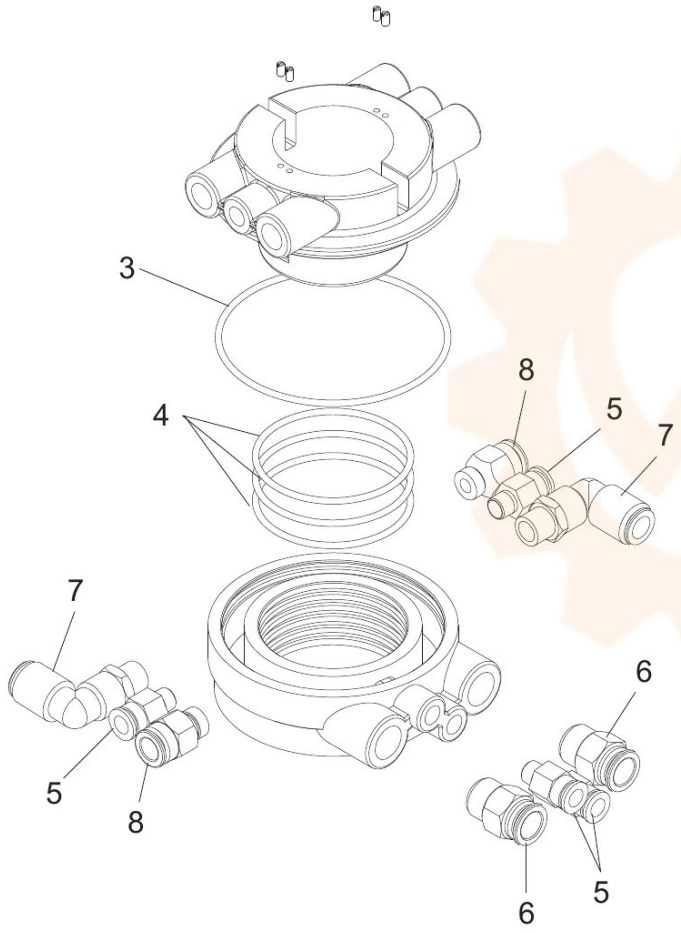

2

NO TI VERSION

