201-2 2-jaw tab puller with oscillating, reversible jaws, up to 220 mm spread, 130 mm reach



DESCRIPTION

The 2-jaw puller with oscillating and reversible jaws is used for centric pulling of bearings, gears, and discs in all common sizes for craft, workshop, and industry. This allows for the loosening of any component that sits on a shaft and is freely accessible from the outside. The oscillating jaws with adjustable reach are applicable on both sides. Depending on the design, the claw shape varies.

APPLICATION AREA

For central extraction of bearings, gears, and discs in all common sizes for crafts, workshops, and industry.

BENEFIT

- Adjustable and 180° rotatable puller jaws for individual adjustment of the reach.
- Oscillating puller jaws offer versatile adjustment options
- Puller jaws with different claw shapes for flexible working
- Claw end with slot provides support for screw for additional support when pulling off
- Safe mounting of the spindle via a rotatable spindle tip on both smooth surfaces and during centering (Switch Technology)
- Anti-slip safety (spindle neck) at the spindle head for safe work with wrench.
- Spindle extension for the protection of the thread

OPERATION

- Position the puller jaws from the outside onto the part to be pulled off
- Swing the claws under the component
- Manually pull the spindle for fixation
- Use a ratchet or a box wrench to move the hexagon on the spindle head until the component is loosened

APPLICATION IMAGE



DETAIL IMAGE



MASTER DATA

GTIN [GTIN]	4021176026676
Country of origin	DE
Material	Tool steel
Series	201
Gross weight [kg]	2,44 kg
Package contents	1 piece
Packaging Act	PAPPE PAP 21
Worldwide sales capability	Yes (REACH, RoHS, POP, PROP65, TSCA)

SPARE PARTS

- 201-2-130-P_2 jaws (pair)
- 201-2-T_Crossbar
- 620260_Two-sided spindle tip
- 621220_Mechanical pressure spindle

2-jaw tab puller with oscillating, reversible jaws, up to 220 mm spread, 130 mm reach

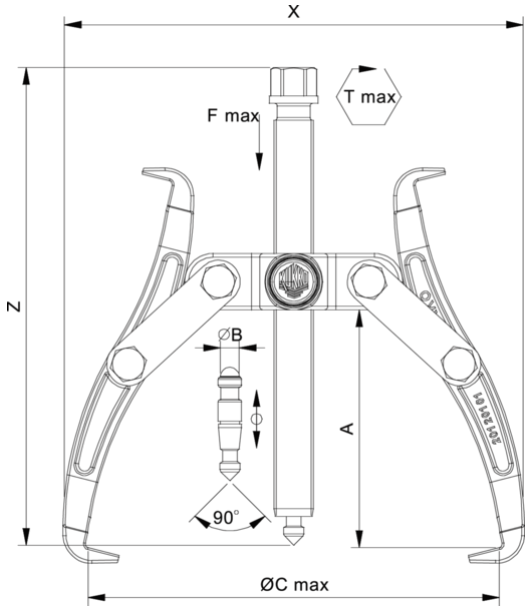

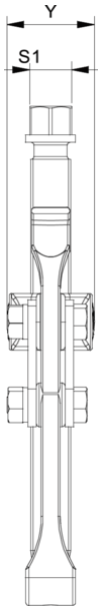

Abbreviation	Attribut	Wert
X	Total width [mm]	250 mm
Y	Total depth [mm]	42 mm
Z	Total height [mm]	245 mm
A	Clamping depth of external puller [mm]	130 mm
S1	Width across flats [mm]	22 mm
Cmin	Span outside pull-off (min.) [mm]	0 mm
Cmax	Span outside pull-off (max.) [mm]	220 mm
K	Hook root thickness at the tip (claw thickness K) [mm]	3 mm
J	Hook base width (claw width J) [mm]	26 mm
O	Hook base depth usable (claw depth usable O) [mm]	18 mm
H	Total hook root depth (total claw depth H) [mm]	33 mm
L	Total claw thickness (L+1mm) [mm]: (claw distance to base surface)	7 mm
Emin	Span inside pull-out (min.) [mm]	80 mm
Tmax	Max. torque [Nm]	150 Nm
Fmax	Max. tractive force [t]	7 t
Fmax	Max. tensile force [kN]	70 kN

Abbreviation	Attribut	Wert
X	Total width [mm]	250 mm
Y	Total depth [mm]	42 mm
Z	Total height [mm]	245 mm
A	Clamping depth of external puller [mm]	130 mm
S1	Width across flats [mm]	22 mm
Cmin	Span outside pull-off (min.) [mm]	0 mm
Cmax	Span outside pull-off (max.) [mm]	220 mm
K	Hook root thickness at the tip (claw thickness K) [mm]	3 mm
J	Hook base width (claw width J) [mm]	26 mm
O	Hook base depth usable (claw depth usable O) [mm]	18 mm
H	Total hook root depth (total claw depth H) [mm]	33 mm
L	Total claw thickness (L+1mm) [mm]: (claw distance to base surface)	7 mm
Emin	Span inside pull-out (min.) [mm]	80 mm
Tmax	Max. torque [Nm]	150 Nm
Fmax	Max. tractive force [t]	7 t
Fmax	Max. tensile force [kN]	70 kN

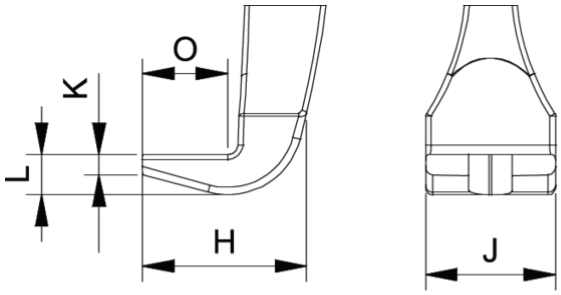

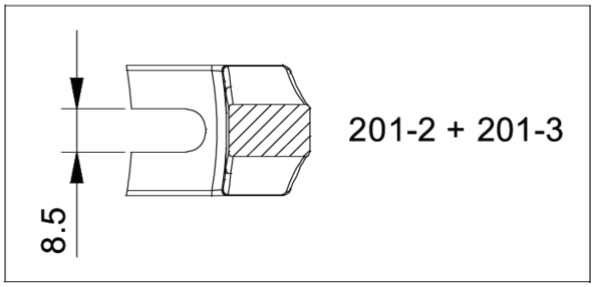

Abbreviation	Attribut	Wert
X	Total width [mm]	250 mm
Y	Total depth [mm]	42 mm
Z	Total height [mm]	245 mm
A	Clamping depth of external puller [mm]	130 mm
S1	Width across flats [mm]	22 mm
Cmin	Span outside pull-off (min.) [mm]	0 mm
Cmax	Span outside pull-off (max.) [mm]	220 mm
K	Hook root thickness at the tip (claw thickness K) [mm]	3 mm
J	Hook base width (claw width J) [mm]	26 mm
O	Hook base depth usable (claw depth usable O) [mm]	18 mm
H	Total hook root depth (total claw depth H) [mm]	33 mm
L	Total claw thickness (L+1mm) [mm]: (claw distance to base surface)	7 mm
Emin	Span inside pull-out (min.) [mm]	80 mm
Tmax	Max. torque [Nm]	150 Nm
Fmax	Max. tractive force [t]	7 t
Fmax	Max. tensile force [kN]	70 kN

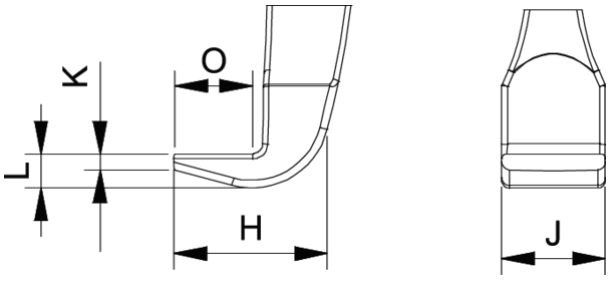

Abbreviation	Attribut	Wert
X	Total width [mm]	250 mm
Y	Total depth [mm]	42 mm
Z	Total height [mm]	245 mm
A	Clamping depth of external puller [mm]	130 mm
S1	Width across flats [mm]	22 mm
Cmin	Span outside pull-off (min.) [mm]	0 mm
Cmax	Span outside pull-off (max.) [mm]	220 mm
K	Hook root thickness at the tip (claw thickness K) [mm]	3 mm
J	Hook base width (claw width J) [mm]	26 mm
O	Hook base depth usable (claw depth usable O) [mm]	18 mm
H	Total hook root depth (total claw depth H) [mm]	33 mm
L	Total claw thickness (L+1mm) [mm]: (claw distance to base surface)	7 mm
Emin	Span inside pull-out (min.) [mm]	80 mm
Tmax	Max. torque [Nm]	150 Nm
Fmax	Max. tractive force [t]	7 t
Fmax	Max. tensile force [kN]	70 kN

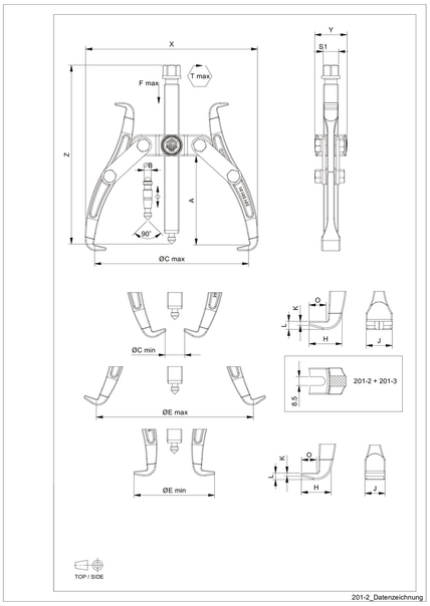

Abbreviation	Attribut	Wert
X	Total width [mm]	250 mm
Y	Total depth [mm]	42 mm
Z	Total height [mm]	245 mm
A	Clamping depth of external puller [mm]	130 mm
S1	Width across flats [mm]	22 mm
Cmin	Span outside pull-off (min.) [mm]	0 mm
Cmax	Span outside pull-off (max.) [mm]	220 mm
K	Hook root thickness at the tip (claw thickness K) [mm]	3 mm
J	Hook base width (claw width J) [mm]	26 mm
O	Hook base depth usable (claw depth usable O) [mm]	18 mm
H	Total hook root depth (total claw depth H) [mm]	33 mm
L	Total claw thickness (L+1mm) [mm]: (claw distance to base surface)	7 mm
Emin	Span inside pull-out (min.) [mm]	80 mm
Tmax	Max. torque [Nm]	150 Nm
Fmax	Max. tractive force [t]	7 t
Fmax	Max. tensile force [kN]	70 kN