21-4-E Internal extractor with spread 24 mm - 34 mm, 55 mm insertion depth



DESCRIPTION

The segment internal extractors of series 21-E are used for extracting flush-mounted bearings, bearing outer rings, sleeves, and seals in crafts, workshops, and industry. The segmented design with extra fine gripping edges allows for the safe extraction of flush-mounted parts. The 21 series impresses with its compatibility and application diversity. Depending on the application, there are numerous variants of the segment internal extractors. They are either used together with counter stays or with sliding hammers.

APPLICATION AREA

To remove bearing pullers, bearing outer rings, bushings, and seals in craftsmanship, workshops, and industry.

BENEFIT

- Due to its segmentation and fine spindle design, the segment puller is ideal for precise and gentle work.
- The mechanical spindle extracts bearings that are tightly seated on the back wall safely and quickly.
- The shaping ensures a secure grip when seating and swiveling for bearings or inner rings that form a blind hole.
- The thread adapters for internal extractors are included in the delivery of the counter stays and sliding hammers.

OPERATION

- Determine the inner diameter of the ball bearing and select the appropriate internal puller
- Insert the internal puller into the hole and tighten the locking nut
- If a support surface is available, choose the counter stay; otherwise, select the sliding hammer

Operation with counter stay:

- Support the counter stay on the housing and screw it onto the wedge spindle of the internal puller
- Hold the handle of the counter stay and safely pull out the bearing by tightening the nut
- Retighten the locking nut while pulling out

Operation with sliding hammer:

- Screw the sliding hammer rod onto the wedge spindle of the internal puller
- Use the sliding hammer with a striking motion to pull out the bearing

APPLICATION IMAGE



DETAIL IMAGE



MASTER DATA

GTIN [GTIN]	4021176909191
Country of origin	DE
Material	Tool steel
Series	21-E
Gross weight [kg]	0,25 kg
Package contents	1 piece
Packaging Act	PAPPE PAP 21
Worldwide sales capability	Yes (REACH, RoHS, POP, PROP65, TSCA)

SUITABLE FOR

- 22-0-05 Sliding Hammer Device with 0.5 kg Impact Weight
- 22-0-17 Sliding Hammer Device with 1.7 kg Impact Weight
- 22-1_Counter Stay
- 22-2_Counter Stay

Internal extractor with spread 24 mm - 34 mm, 55 mm insertion depth

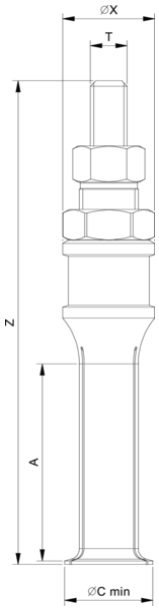

Abbreviation	Attribut	Wert
Z	Total height [mm]	135 mm
S1	Width across flats [mm]	17 mm
S2	Width across flats [mm]	22 mm
Emin	Span inside pull-out (min.) [mm]	24 mm
Emax	Span inside pull-out (max.) [mm]	34 mm
X	Diameter of the extractor [mm]	25 mm
T	Mounting thread [mm]	M10



Abbreviation	Attribut	Wert
Z	Total height [mm]	135 mm
S1	Width across flats [mm]	17 mm
S2	Width across flats [mm]	22 mm
Emin	Span inside pull-out (min.) [mm]	24 mm
Emax	Span inside pull-out (max.) [mm]	34 mm
X	Diameter of the extractor [mm]	25 mm
T	Mounting thread [mm]	M10

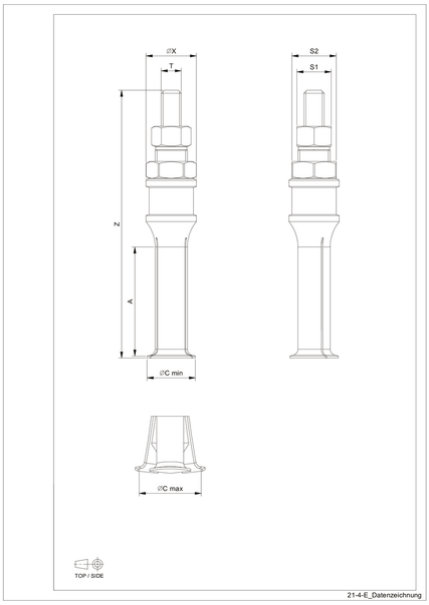

Abbreviation	Attribut	Wert
Z	Total height [mm]	135 mm
S1	Width across flats [mm]	17 mm
S2	Width across flats [mm]	22 mm
Emin	Span inside pull-out (min.) [mm]	24 mm
Emax	Span inside pull-out (max.) [mm]	34 mm
X	Diameter of the extractor [mm]	25 mm

T	Mounting thread [mm]	M10