Koevoet 20 inch | Mondolfo Ferro C-54-8000003

Bright LC590 · 13 revision 19-01 · positie 18 (2 keer op deze tekening)

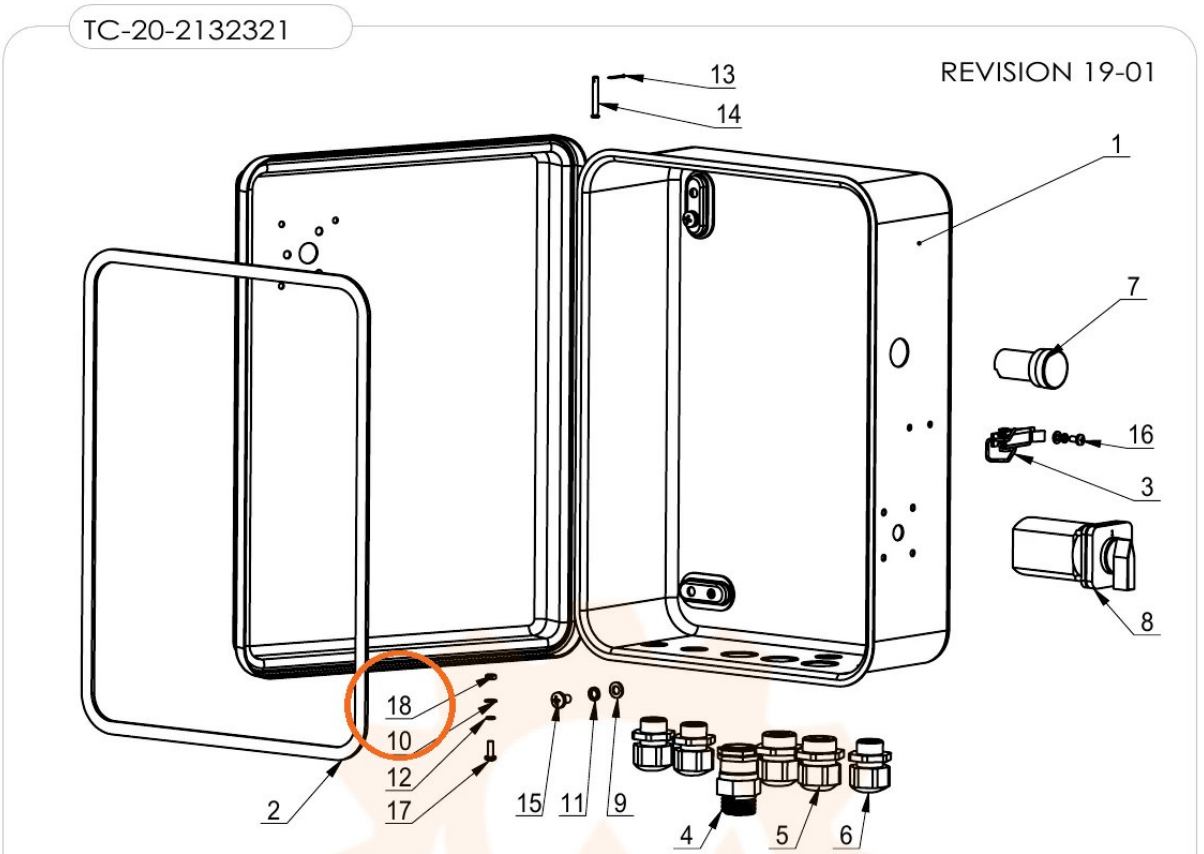

ITEM	PART.No	DESCRIPTION.	QT.Y
1	TC-E1-2000000	ELECRICAL BOX	1
2	TC-E-8400001	SEAL RUBBER BAR	1
3	TC-E-8300001	DOOR LOCK	1
4	TC-E-7700125	CABLE LOCK ASSEMBLY	1
5	TC-E-7700027	CABLE LOCK M27X1.5 PG21	2
6	TC-E-7700020	CABLE LOCK HEAD M20X1.5	3
7	TC-E-7202401	ELECTRICAL SUPPLY INDICATING LIGHT	1
8	TC-E-22D2500	DOUBLE SPEED SWITCH	1
9	GB95-6	FLAT WASHER	4
10	GB95-4	FLAT WASHER	3
11	GB93-6	STANDARD SPRING WASHER	4
12	GB93-4	STANDARD SPRING WASHER	3
13	GB91-1.2×12	SLOTTED PIN	2
14	GB882-4×30	PIN SHAFT	2
15	GB818-M6×10-H	CROSS PANHEAD SCREW	4
16	GB818-M4×8-H	CROSS PANHEAD SCREW	2
17	GB818-M4×12-H	CROSS PANHEAD SCREW	1
18	GB6170-M4	HEXANGULAR NUT 1-TYPE	1