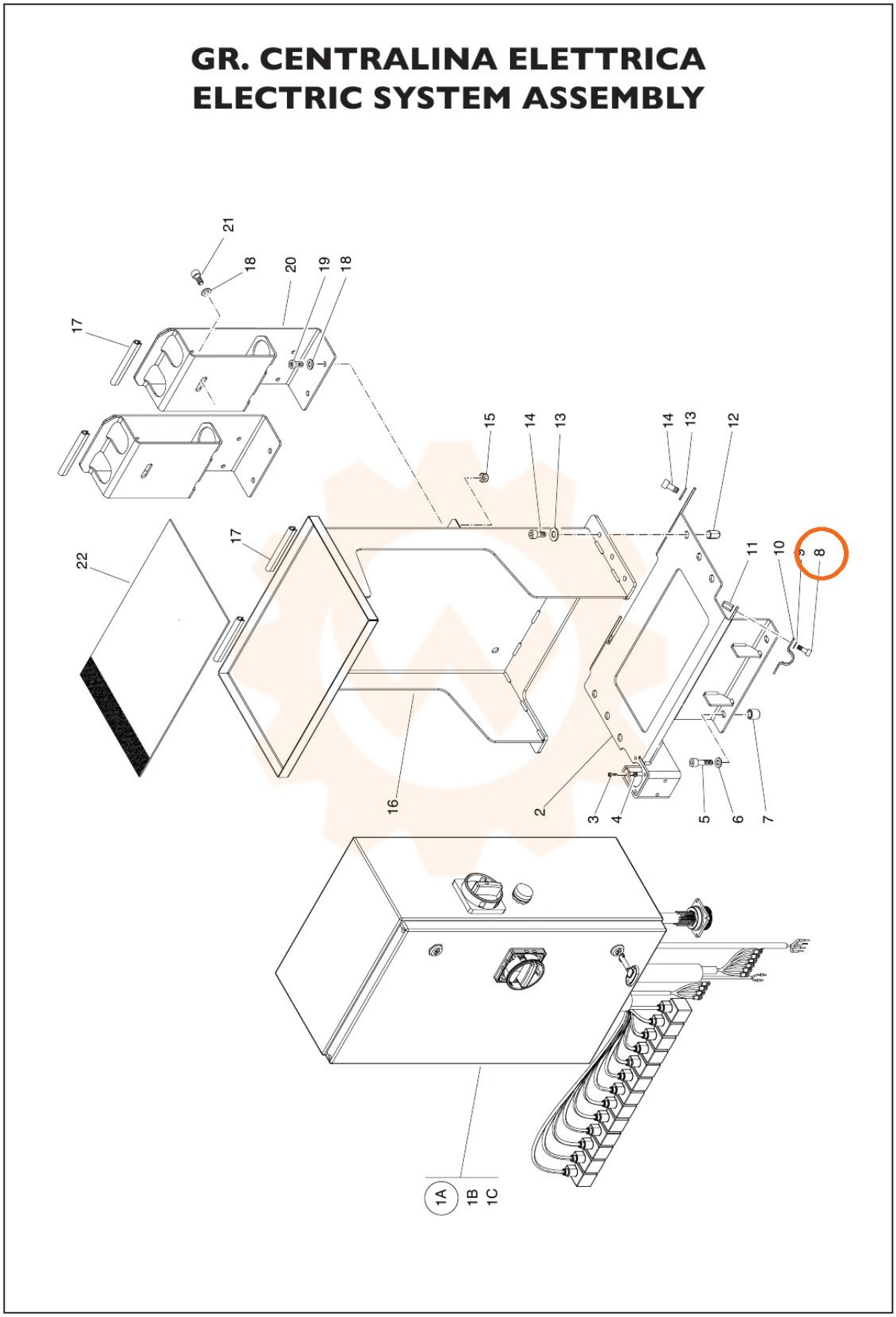
GR. CENTRALINA ELETTRICA
ELECTRIC SYSTEM ASSEMBLY
21
18
20
19
18
17
15
14
13
14
13
12
22
17
11
10
9
8
16
2
3
4
5
6
7
1A
1B
1C