Borgmoer M10 | Mondolfo Ferro 2-01019

Corghi Artiglio Master Code · 2021 · Head carriage group (new) · positie 27 (2 keer op deze tekening)

GRUPPO CARRELLO TESTINA (NEW)
HEAD CARRIAGE GROUP (NEW)

DALLA MATRICOLA CQF187769 (LUGLIO 2020)
SINCE S/N CQF187769 (JULY 2020)

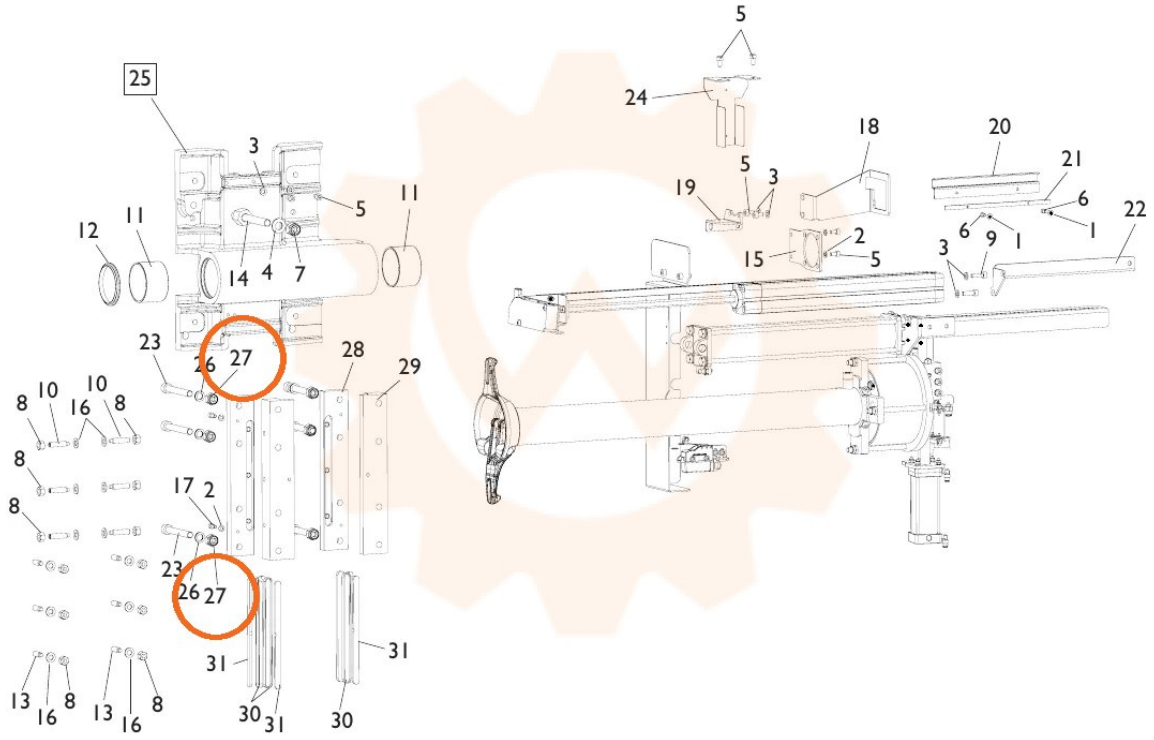

TORNA AL COMPLESSIVO
RETURNS TO OVERALL

Onderdelentekening Mondolfo Ferro · Workshopparts B.V. · workshopparts.nl · artikelnummer 900239