TC-12-0000000

REVISION A-01

TC-10-1600000 MIANSHAFT OIL TANK AND OIL GUIDE ASSEMBLY

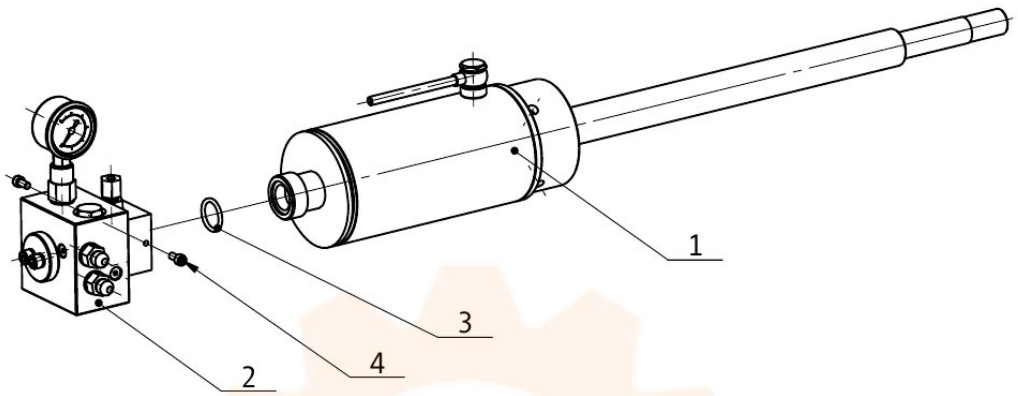

ITEM	PART. No	DESCRIPTION.	QTY
1	TC-10-1610000	MAIN SHAFT OIL TANK ASSEMBLY	1
2	TC-10-1620000	OIL GUIDE ASSEMBLY PARTS	1
3	GB3452.1 25×3.55	O-RING G 25×3.55-G	1
4	GB70.1-M6×12	INNER HEXA CYLINDRICAL SCREW	2

designed by: checked by: approved by:

11