Dop | Mondolfo Ferro 448000

Mondolfo Ferro Aquila Tornado · 2025 · Overzichtstekening · positie 30

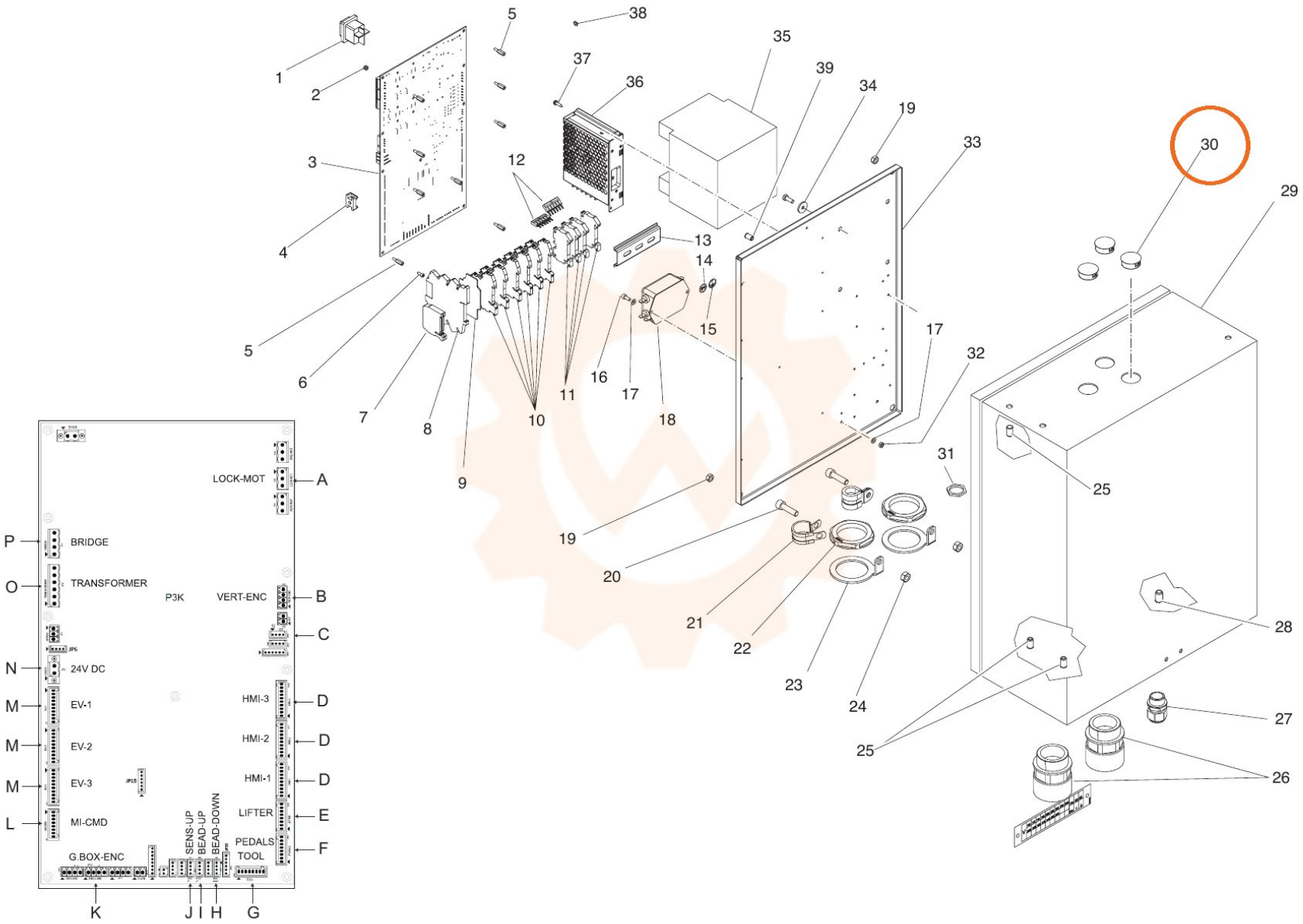
LOCK-MOT
BRIDGE
TRANSFORMER
P3K
VERT-ENC
24V DC
EV-1
EV-2
EV-3
MI-CMD
HMI-3
HMI-2
HMI-1
LIFTER
PEDALS
TOOL
G.BOX-ENC
SENS-UP
BEAD-UP
BEAD-DOWN
A
B
C
D
E
F
G
H
I
J
K
L
M
N
O
P