| CORGHI | ARTIGLIO MASTER | Fig. E | 05 / 04 | Pedaliera |
|---|---|---|---|---|

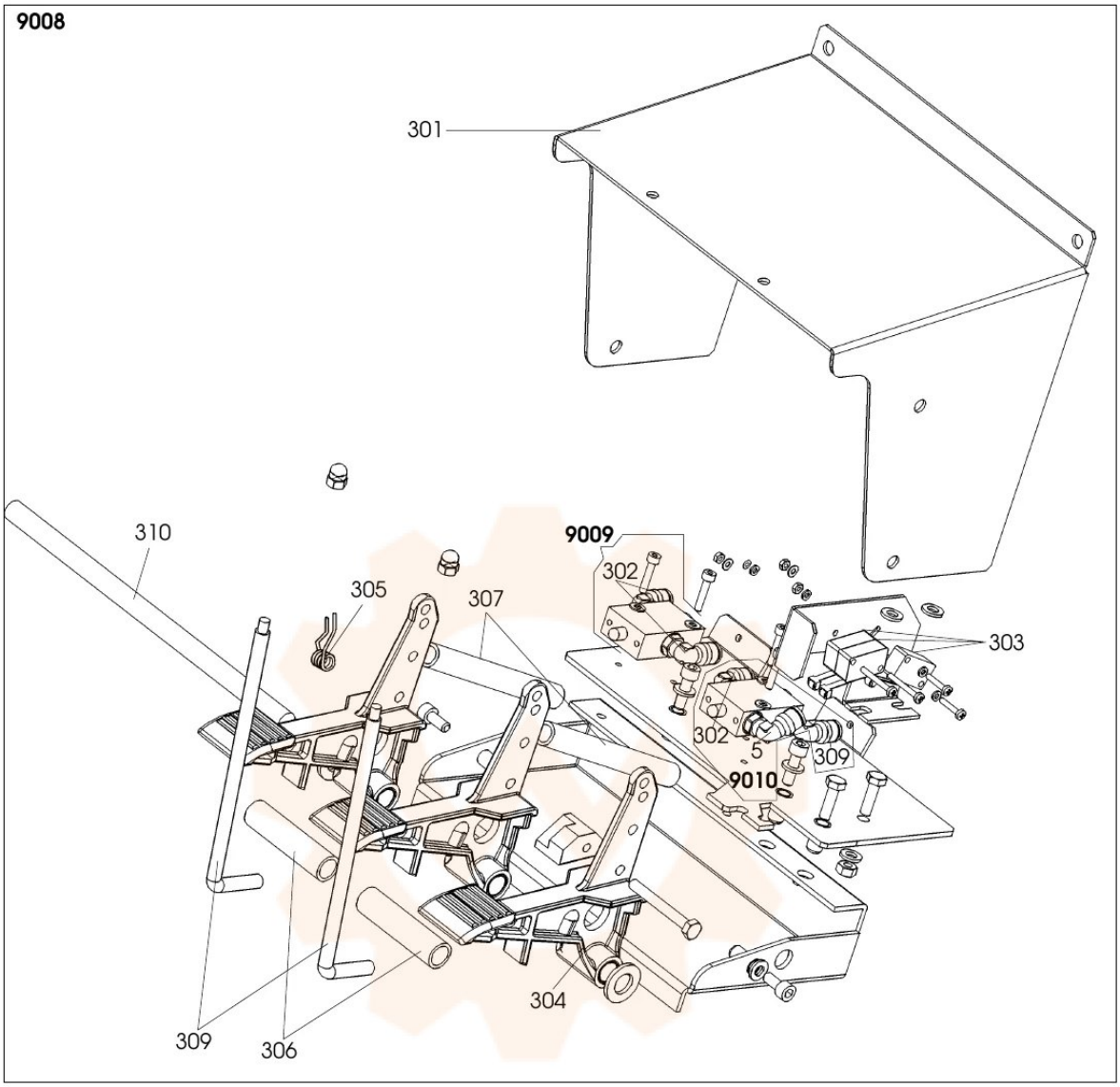


| | | | | | |
|---|---|---|---|---|---|
| **9008** | **900261980** | **PEDALIERA** | **CONTROL PEDAL** | **PEDALERIE** | **GR.PEDALES** |
| **9009** | **900261525** | **VALVOLA** | **VALVE** | **VENTIL** | **VANNE** |
| 0302 | 900440868 | RACCORDO | CONNECTOR | ANSCHLUSS | RACCORD |
| **9010** | **900261979** | **VALVOLA** | **VALVE** | **VENTIL** | **VANNE** |
| 0005 | 900440870 | RACCORDO | CONNECTOR | ANSCHLUSS | RACCORD |
| 0302 | 900440868 | RACCORDO | CONNECTOR | ANSCHLUSS | RACCORD |
| 0301 | 900361536 | COPERCHIO | LID | DECKEL | COUVERCLE |
| 0303 | 900440874 | MICROINTERR. | MICROSWITCH | MIKROSCHALTER | MICROINTERRUPTEUR |
| 0304 | 900252010 | PEDALE | PEDAL | PEDAL | PEDALE |
| 0305 | 900428682 | MOLLA | SPRING | FEDER | RESSORT |
| 0306 | 900361534 | DISTANZIALE | SPACER | ABSTANDSSTUECK | ENTRETOISE |
| 0307 | 900410628 | MOLLA | SPRING | FEDER | RESSORT |
| 0309 | 900361537 | PROTEZIONE | SHIELD | ABDECKUNG | PROTECTION |
| 0310 | 9004-102179 | PERNO | PIN | ZAPFEN | PIVOT |