Regulatorfilter 1/4 (0/10) | Mondolfo Ferro 3-00346

Mondolfo Ferro Aquila Rapax · 2025 · Tekening 1 · positie 4

FINO A MATRCOLA / UP TO S/N FVC500289

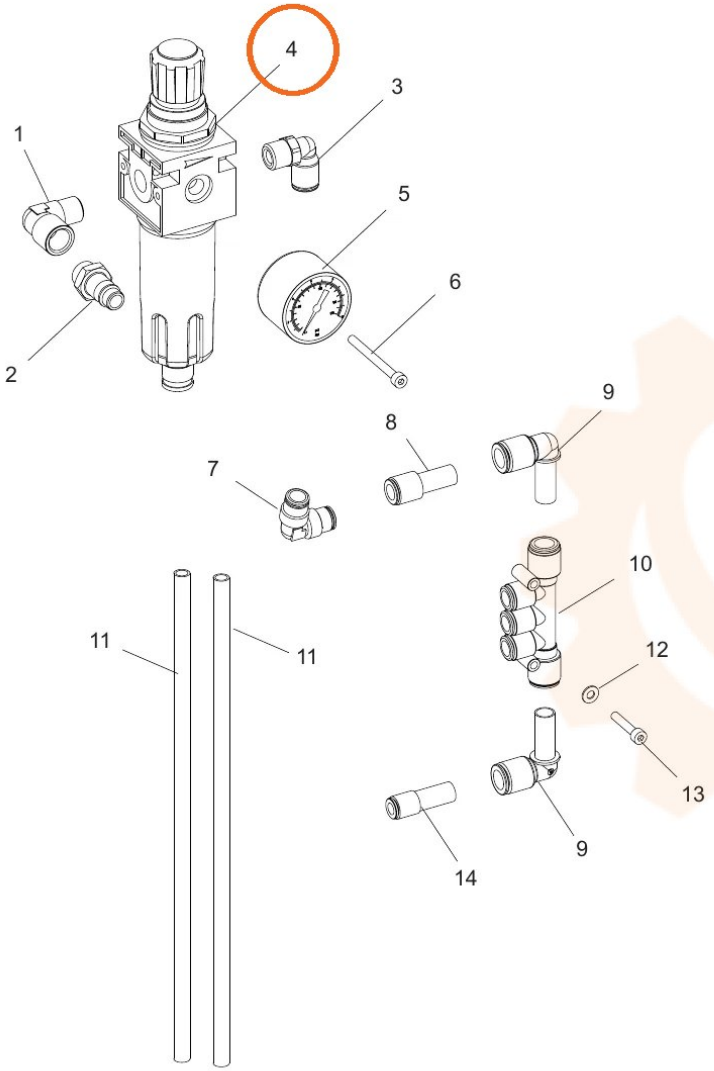

DA MATRCOLA / FROM S/N FVC500289

