17-0 Pulling device with quick-clamping pressure spindle, separating diameter 8 mm - 60 mm, 21 mm usable cutting depth



DESCRIPTION

The pulling devices of series 17 are used together with the puller of series 18 for pulling ball bearing, roller bearings, inner rings and other flat-lying parts in trades, industry and workshops when there is not enough space for jaws. The separation-pulling process is able to first separate those parts gently before they can be pulled off from the outside. Compared to series 15, series 17 is particularly handy because the separating jaws are quickly and centrally clamped by a pressure spindle.

APPLICATION AREA

To pull ball bearings, roller bearings, inner rings, and other flush-mounted parts in craft, industry, and workshop.

BENEFIT

- A simple and safe handling is made possible by the quick-release clamp spindle.
- The sharp blades allow for extraction where other types of pullers are unsuitable.
- By screwing the separating and pulling device together, the highest stability during pulling is ensured.
- If the separation jaws are screwed into the tightening device in reverse, the support surface is enlarged and is pulled off more gently.

OPERATION

- Press the sharp edges of the pulling device behind the part
- Tension the separating jaws by actuating the spindle and ensure that the separating knife are seated under the part to be pulled up to the stop
- Screw the side screw of the puller up to the stop into the threaded holes of the pulling device
- Hold the pulling device and pull off the relevant part safely and carefully by tightening the knurled nut

MASTER DATA

GTIN [GTIN]	4021176008108
Country of origin	DE
Material	Tool steel
Series	17
Gross weight [kg]	0,95 kg
Package contents	1 piece
Packaging Act	Rezykkat rHDPE 61
Worldwide sales capability	Yes (REACH, RoHS, POP, PROP65, TSCA)

SUITABLE FOR

- 18-0_extractor device

SPARE PARTS

- 017140_Side bolt with nut
- 17-0-06_Press spindle
- 17-0-T_crossbar

APPLICATION IMAGE



DETAIL IMAGE



Pulling device with quick-clamping pressure spindle, separating diameter 8 mm - 60 mm, 21 mm usable cutting depth

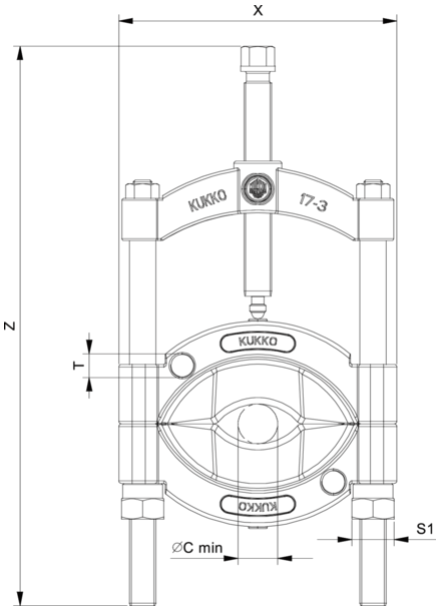

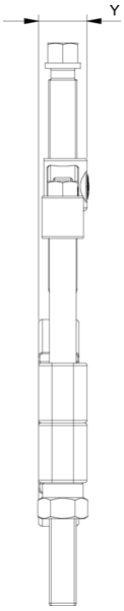

Abbreviation	Attribut	Wert
X	Total width [mm]	100 mm
Y	Total depth [mm]	19,5 mm
Z	Total height [mm]	205 mm
S1	Width across flats [mm]	17 mm
Cmin	Cut-off diameter (min.) [mm]	8 mm
Cmax	Separating diameter (max.) [mm]	60 mm
K	Cutting edge thickness at the tip [mm]	0,3 mm
O	Usable snow depth [mm]	21 mm
H	Total cutting edge height [mm]	39,5 mm
L	Rear cutting edge thickness [mm]	5,5 mm
T1	Mounting thread for tension bolt [mm]	M10

Abbreviation	Attribut	Wert
X	Total width [mm]	100 mm
Y	Total depth [mm]	19,5 mm
Z	Total height [mm]	205 mm
S1	Width across flats [mm]	17 mm
Cmin	Cut-off diameter (min.) [mm]	8 mm
Cmax	Separating diameter (max.) [mm]	60 mm
K	Cutting edge thickness at the tip [mm]	0,3 mm
O	Usable snow depth [mm]	21 mm
H	Total cutting edge height [mm]	39,5 mm
L	Rear cutting edge thickness [mm]	5,5 mm
T1	Mounting thread for tension bolt [mm]	M10

A-A

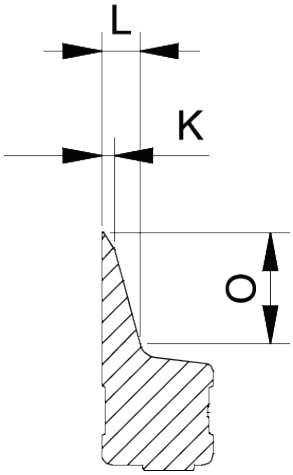

Abbreviation	Attribut	Wert
X	Total width [mm]	100 mm
Y	Total depth [mm]	19,5 mm

Z	Total height [mm]	205 mm
S1	Width across flats [mm]	17 mm
Cmin	Cut-off diameter (min.) [mm]	8 mm
Cmax	Separating diameter (max.) [mm]	60 mm
K	Cutting edge thickness at the tip [mm]	0,3 mm
O	Usable snow depth [mm]	21 mm
H	Total cutting edge height [mm]	39,5 mm
L	Rear cutting edge thickness [mm]	5,5 mm
T1	Mounting thread for tension bolt [mm]	M10