HYDRAULIC PUMP UNIT 220V/50HZ/1P

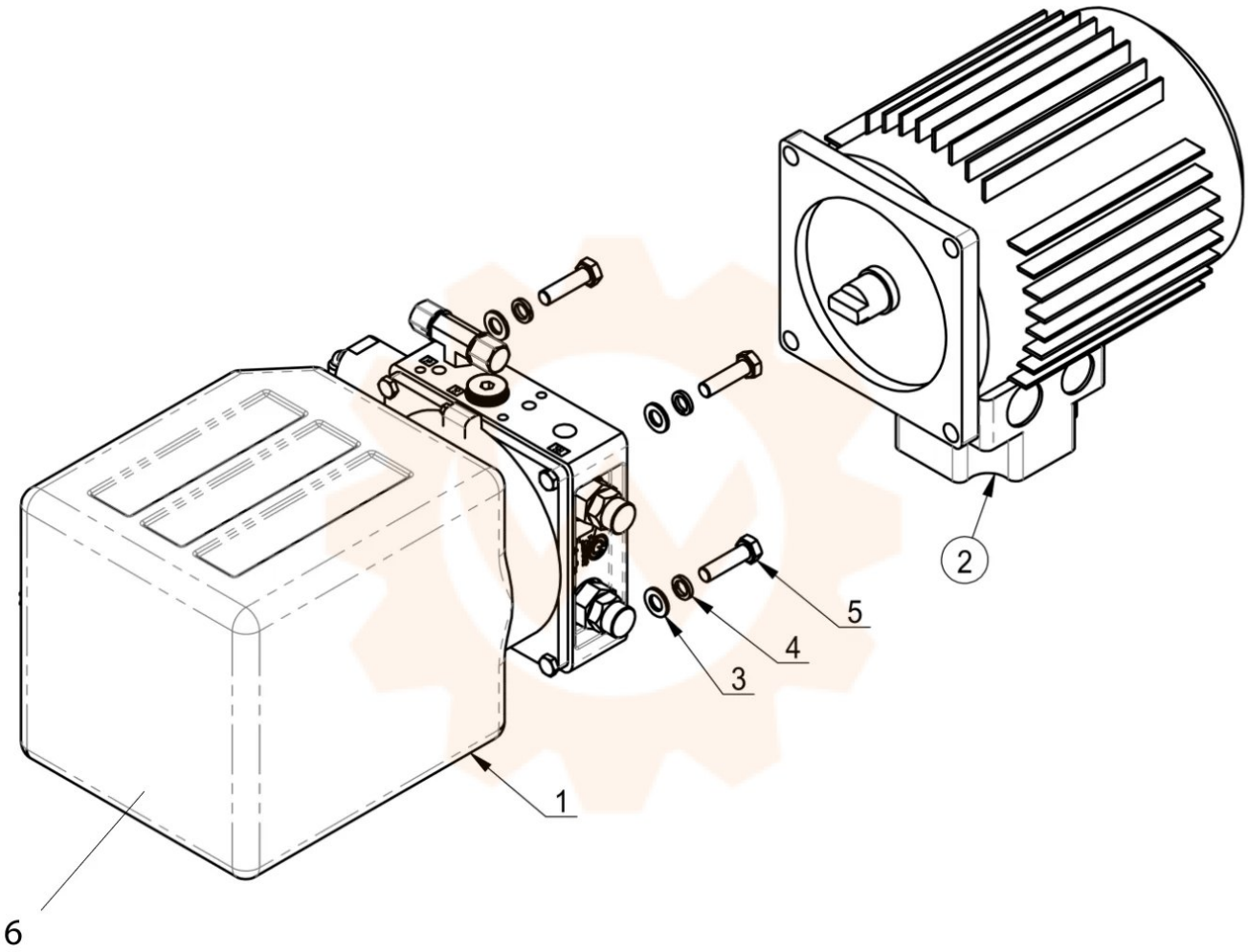

MODEL 3.2 Ton 220V/50HZ/1P 250bar

MODEL 3.6 Ton 220v/50HZ/1P 290bar