CORGHI	A 9212 T.I	Fig. D1	05 / 00	Pedaliera pneumatica

PANZITTA SALES & SERVICE
72 George Avenue
Wilkes-Barre, PA 18705
570-822-6720 800-822-6720
www.panzittasales.com

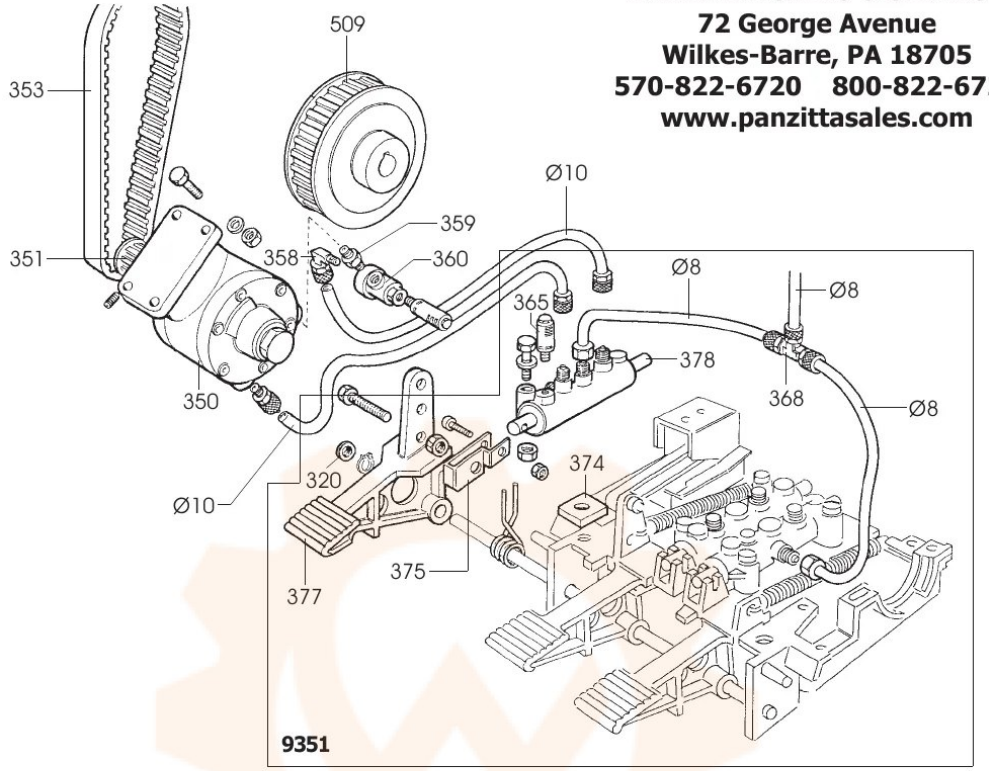

Ø8	900701683	TUBO	PIPE	ROHR	TUYAU
Ø10	900701875	TUBO	PIPE	ROHR	TUYAU
0350	900319135	MOTORE	MOTOR	MOTOR	MOTEUR
0351	900319076	PULEGGIA	PULLEY	RIEMENSCHEIBE	POULIE
0353	900425238	CINGHIA	BELT	RIEMEN	COURROIE
0358	900418350	RACCORDO	CONNECTOR	ANSCHLUSS	RACCORD
0359	900419142	NIPPLO	CONNECTION	NIPPEL	NIPPLE
0360	900419141	VALVOLA	VALVE	VENTIL	VANNE
0509	900319073	PULEGGIA	PULLEY	RIEMENSCHEIBE	POULIE

9351	900270526	PEDALIERA	CONTROL PEDAL	PEDALERIE	GR.PEDALES
0320	900452011	BOCCOLA	BUSHING	LAGER	DOUILLE
0365	900422682	SILENZIATORE	SILENCER	SCHALLDAEMPFER	SILENCIEUX
0368	900415860	RACCORDO	CONNECTOR	ANSCHLUSS	RACCORD
0374	900329058	PIASTRINA	PLATE	PLAETTCHEN	PLAQUETTE
0375	900331381	BIELLA	TRACE	PLEUELSTANGE	BIELLE
0377	900352029	PEDALE	PEDAL	PEDAL	PEDALE
0378	900258456	RUBINETTO	COCK	HAHN	ROBINET