# IMPIANTO ELETTRICO
# ELECTRICAL SYSTEM

**VERSIONE DV**
**2 SPEED VERSION**

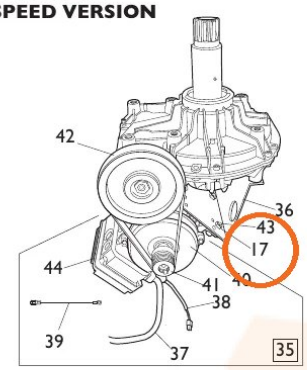


**VERSIONE PNEUMATICA**
**PNEUMATIC VERSION**

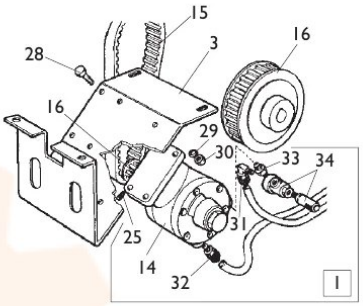


**VERSIONE CCSAUS**
**CCSAUS VERSION**

**SOLO X CANADA**
**ONLY FOR CANADA**

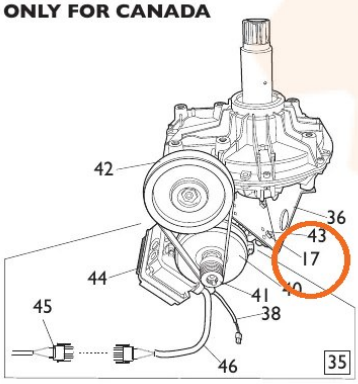


**VERSIONE 3ph / 1ph**
**3ph / 1ph VERSION**

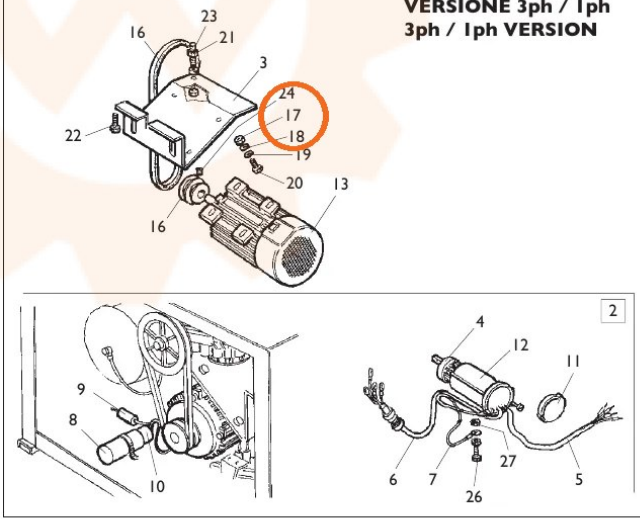


**PANZITTA SALES & SERVICE**
**72 George Avenue**
**Wilkes-Barre, PA 18705**
**570-822-6720 800-822-6720**
**www.panzittasales.com**