CORGHI	AG 52 L (06)	Fig. H	02 / 05	Impianto pneumatico

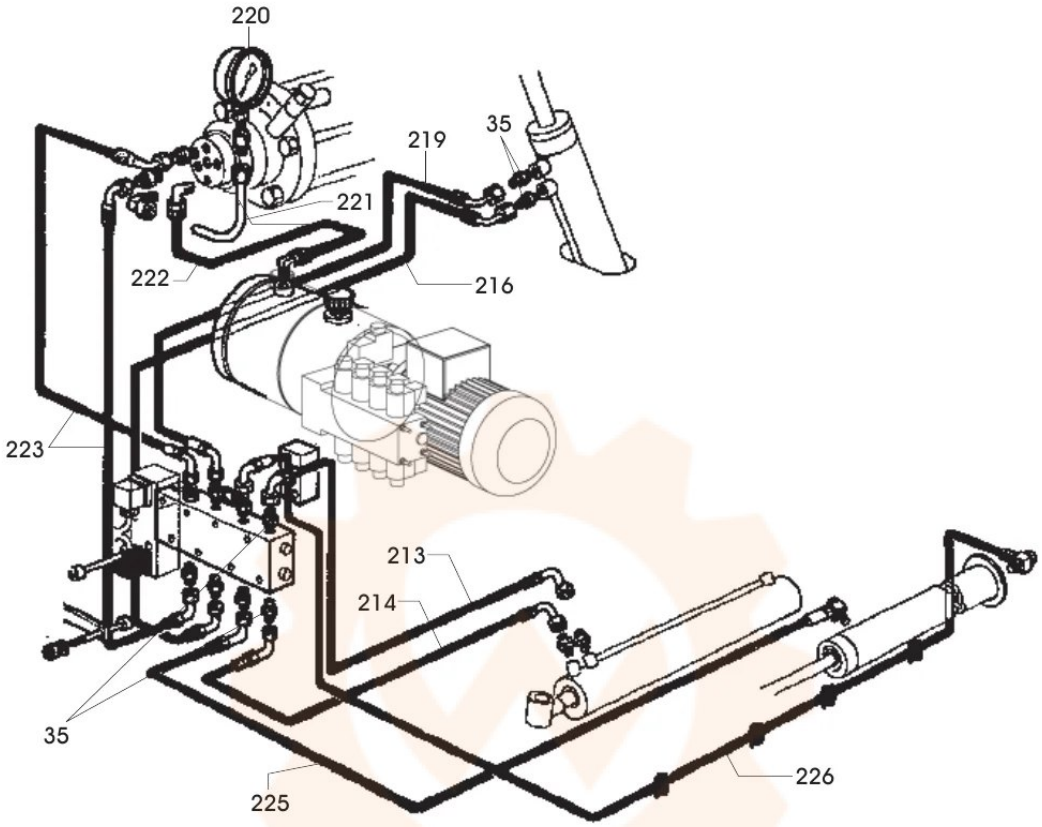

0213	900435425	TUBO	PIPE	ROHR	TUYAU
0214	900434243	TUBO	PIPE	ROHR	TUYAU
0216	900434241	TUBO	PIPE	ROHR	TUYAU
0219	900434242	TUBO	PIPE	ROHR	TUYAU
0220	900434478	MANOMETRO	PRESSURE GAUGE	DRUCKMESSER	MANOMETRE
0221	900334427	TUBO	PIPE	ROHR	TUYAU
0223	900434239	TUBO	PIPE	ROHR	TUYAU
0225	900434245	TUBO	PIPE	ROHR	TUYAU
0226	900436110	TUBO	PIPE	ROHR	TUYAU