205-2-B 2-jaw tab puller with oscillating, height-adjustable jaws, hydraulic spindle, up to 400 mm spread, 400 mm reach



DESCRIPTION

The heavy, 2-jaw puller with oscillating, height-adjustable jaws and hydraulic spindle is used for centric pulling of large, particularly stubborn bearings, gears, and discs in all common sizes for crafts, workshops, and industry. The hydraulic spindle achieves a tension force of 12 t. This allows loosening any component that sits on a shaft and is freely accessible from the outside. For pulling operations with a tension force of up to 12 t and/or in tight spaces, the mechanical spindle can be used. The oscillating jaws adapt to any installation situation and are universally applicable due to the adjustable reach. Depending on the version, the jaw shape differs.

APPLICATION AREA

For the centralized removal of large, particularly stubborn bearings, gears, and discs in all common sizes for crafts, workshops, and industry.

BENEFIT

- Adjustable puller jaws for individual reach adjustment
- Puller jaws with different claw shapes for flexible working
- Claw end with slot provides support for screw for additional support when pulling off
- The hydraulic spindle guarantees easy and controlled removal of particularly tight-fitting parts with minimal effort.
- In limited space conditions that require direct access to the component, the mechanical spindle can be used.
- The mechanical spindle features a rotatable spindle tip for secure placement on smooth surfaces and during centering.
- Safe setup of the spindle through a swivel spindle tip on both smooth surfaces and during centering (Switch Technology)
- Anti-slip safety (spindle neck) at spindle head for safe work with wrench.
- Spindle output to protect the thread

OPERATION

- Position the puller jaws from the outside onto the part to be removed
- Pivot the claws under the component
- Engage the hexagon on the spindle head with a ratchet or a ring spanner
- Advance the hydraulic spindle until the component is loosened

MASTER DATA

GTIN [GTIN]	4021176886096
Country of origin	DE
Material	Tool steel
Series	205-B
Gross weight [kg]	8,978 kg
Package contents	1 piece
Packaging Act	PAPPE PAP 21
Worldwide sales capability	Yes (REACH, RoHS, POP, PROP65, TSCA)

SPARE PARTS

- 201-3-T_Crossbar
- 205-2-400-P_2 puller jaws with adjustable reach (pair)
- 626400_Hydraulic spindle
- Hydraulic spindle

2-jaw tab puller with oscillating, height-adjustable jaws, hydraulic spindle, up to 400 mm spread, 400 mm reach

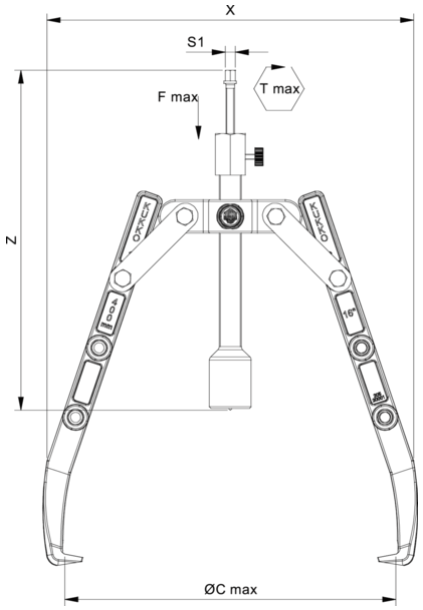

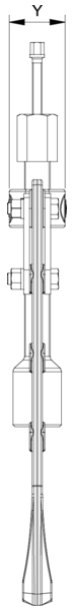

Abbreviation	Attribut	Wert
X	Total width [mm]	446 mm
Y	Total depth [mm]	58 mm
Z	Total height [mm]	480 mm
A	Clamping depth of external puller [mm]	400 mm
S1	Width across flats [mm]	12 mm
Cmin	Span outside pull-off (min.) [mm]	0 mm
Cmax	Span outside pull-off (max.) [mm]	400 mm
A6	Clamping depth of A6 external pull-off (hydraulic) [mm]	350 mm
K	Hook root thickness at the tip (claw thickness K) [mm]	5 mm
J	Hook base width (claw width J) [mm]	30 mm
O	Hook base depth usable (claw depth usable O) [mm]	23 mm
H	Total hook root depth (total claw depth H) [mm]	46 mm
L	Total claw thickness (L+1mm) [mm]: (claw distance to base surface)	20 mm
Tmax	Max. torque [Nm]	20 Nm
Fmax	Max. tractive force [t]	12 t
Fmax	Max. tensile force [kN]	120 kN

Abbreviation	Attribut	Wert
X	Total width [mm]	446 mm
Y	Total depth [mm]	58 mm
Z	Total height [mm]	480 mm
A	Clamping depth of external puller [mm]	400 mm
S1	Width across flats [mm]	12 mm
Cmin	Span outside pull-off (min.) [mm]	0 mm
Cmax	Span outside pull-off (max.) [mm]	400 mm
A6	Clamping depth of A6 external pull-off (hydraulic) [mm]	350 mm
K	Hook root thickness at the tip (claw thickness K) [mm]	5 mm
J	Hook base width (claw width J) [mm]	30 mm
O	Hook base depth usable (claw depth usable O) [mm]	23 mm
H	Total hook root depth (total claw depth H) [mm]	46 mm
L	Total claw thickness (L+1mm) [mm]: (claw distance to base surface)	20 mm
Tmax	Max. torque [Nm]	20 Nm
Fmax	Max. tractive force [t]	12 t
Fmax	Max. tensile force [kN]	120 kN

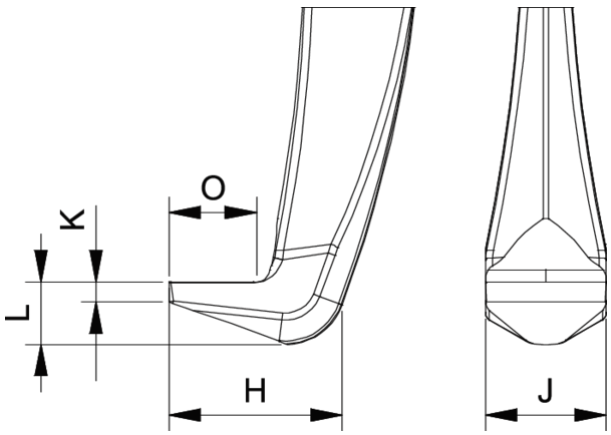

Abbreviation	Attribut	Wert
X	Total width [mm]	446 mm
Y	Total depth [mm]	58 mm
Z	Total height [mm]	480 mm
A	Clamping depth of external puller [mm]	400 mm

S1	Width across flats [mm]	12 mm
Cmin	Span outside pull-off (min.) [mm]	0 mm
Cmax	Span outside pull-off (max.) [mm]	400 mm
A6	Clamping depth of A6 external pull-off (hydraulic) [mm]	350 mm
K	Hook root thickness at the tip (claw thickness K) [mm]	5 mm
J	Hook base width (claw width J) [mm]	30 mm
O	Hook base depth usable (claw depth usable O) [mm]	23 mm
H	Total hook root depth (total claw depth H) [mm]	46 mm
L	Total claw thickness (L+1mm) [mm]: (claw distance to base surface)	20 mm
Tmax	Max. torque [Nm]	20 Nm
Fmax	Max. tractive force [t]	12 t
Fmax	Max. tensile force [kN]	120 kN

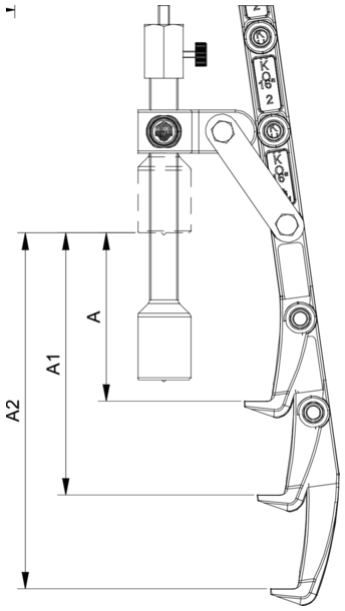

Abbreviation	Attribut	Wert
X	Total width [mm]	446 mm
Y	Total depth [mm]	58 mm
Z	Total height [mm]	480 mm
A	Clamping depth of external puller [mm]	400 mm
S1	Width across flats [mm]	12 mm
Cmin	Span outside pull-off (min.) [mm]	0 mm
Cmax	Span outside pull-off (max.) [mm]	400 mm
A6	Clamping depth of A6 external pull-off (hydraulic) [mm]	350 mm
K	Hook root thickness at the tip (claw thickness K) [mm]	5 mm
J	Hook base width (claw width J) [mm]	30 mm
O	Hook base depth usable (claw depth usable O) [mm]	23 mm
H	Total hook root depth (total claw depth H) [mm]	46 mm
L	Total claw thickness (L+1mm) [mm]: (claw distance to base surface)	20 mm
Tmax	Max. torque [Nm]	20 Nm
Fmax	Max. tractive force [t]	12 t
Fmax	Max. tensile force [kN]	120 kN

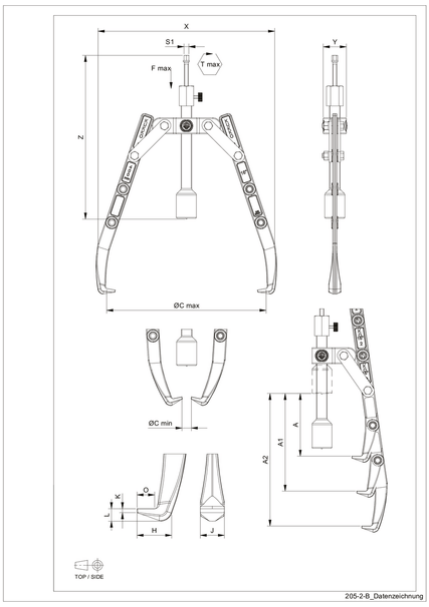

Abbreviation	Attribut	Wert
X	Total width [mm]	446 mm
Y	Total depth [mm]	58 mm
Z	Total height [mm]	480 mm
A	Clamping depth of external puller [mm]	400 mm
S1	Width across flats [mm]	12 mm
Cmin	Span outside pull-off (min.) [mm]	0 mm
Cmax	Span outside pull-off (max.) [mm]	400 mm
A6	Clamping depth of A6 external pull-off (hydraulic) [mm]	350 mm
K	Hook root thickness at the tip (claw thickness K) [mm]	5 mm
J	Hook base width (claw width J) [mm]	30 mm
O	Hook base depth usable (claw depth usable O) [mm]	23 mm
H	Total hook root depth (total claw depth H) [mm]	46 mm
L	Total claw thickness (L+1mm) [mm]: (claw distance to base surface)	20 mm
Tmax	Max. torque [Nm]	20 Nm
Fmax	Max. tractive force [t]	12 t

Fmax	Max. tensile force [kN]	120 kN