Transformator | Mondolfo Ferro TC-E-3940024

Mondolfo Ferro Titan PI 235HC B · 2025 · Overzichtstekening · positie 13

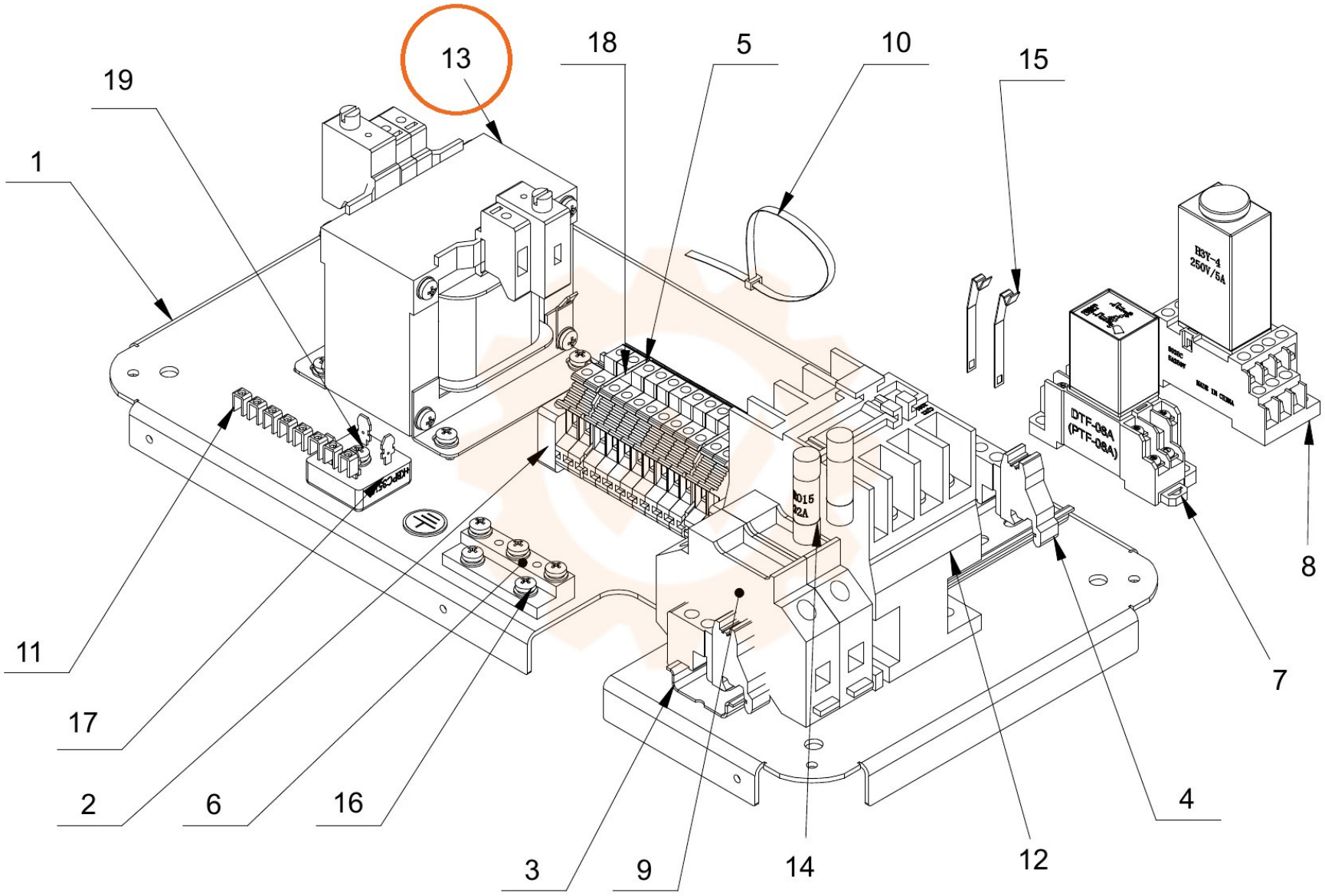
13
18
5
10
15
19
1
11
17
2
6
16
3
9
14
12
4
7
8
R3Y-4
250V/5A
DTF-08A
(PTF-08A)