Manometer bar | Mondolfo Ferro 3-00486

Mondolfo Ferro Aquila AS 944 LL · 2026 · Tekening 8 · positie 18

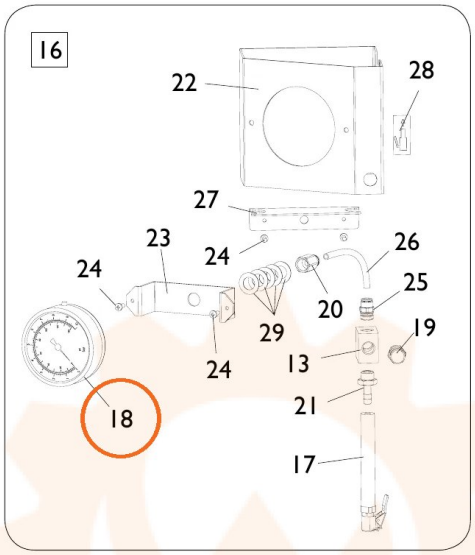
16
22
28
27
23
24
24
26
25
20
29
24
19
13
21
18
17

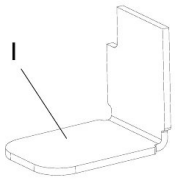
1

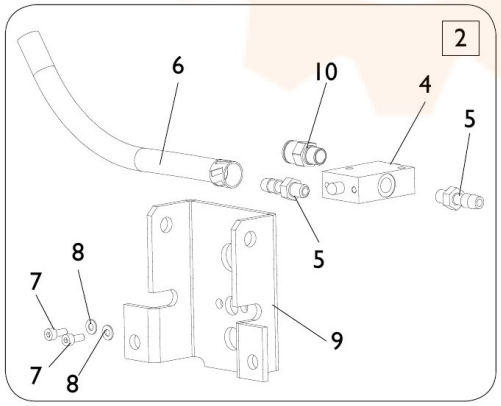
2
6
10
4
5
5
8
7
9
7
8

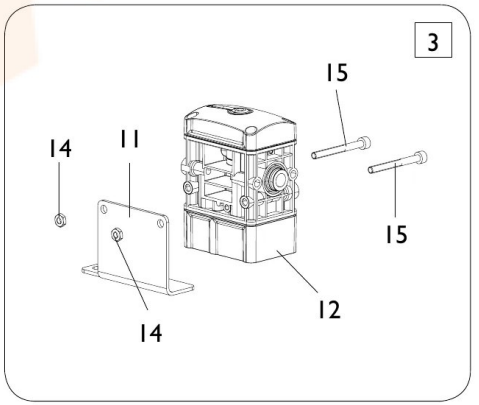
3
15
14
11
15
12
14