20-30x 2-jaw universal puller with quick adjustment jaws, up to 350 mm spread, 200 mm reach



APPLICATION IMAGE



DETAIL IMAGE



DESCRIPTION

Based on the ingenuity and pioneering spirit of Alfred Kleinbongartz, the universal pullers with sliding, always-parallel jaws of series 20x are receiving a functional upgrade. The focus is on operating convenience and user-friendliness. Specifically, the following optimizations have been implemented: For even more flexibility during Pulling, the puller range has been expanded by two sizes (20-0x and 20-00x). This results in a spread range for external extraction from 0 to 350 mm as well as a maximum tension force of 2.5 to 10.5 t. To increase load capacity, the pullers have been equipped with reinforced shoulders, creating a stable H-profile. This is thanks to the newly rethought, innovative design of the crossbar, which ensures maximum stability even under high tension force. Above the crossbar there is an adjustment scale as an orientation aid, which enables uniform adjustment of the jaws and ensures concentric as well as force-optimized Pulling even at the highest pulling forces. Thanks to the quick-clamping jaws, settings and readjustments can be carried out quickly and easily. Below the crossbar, in addition to the item number of the crossbar for reorders, there is another six-digit number. The first three digits indicate which spindle is compatible with the crossbar. The last three digits (xxx) identify the variable spindle length, which varies depending on the version in the range between 85 mm and 600 mm. In addition to mechanical spindles with a different thread length, grease hydraulic spindles can also be used—depending on the size of the puller—as part of a hydraulic upgrade, for easy and controlled Pulling of particularly stubborn parts. Another Advantage is the two eyelets on the sides of the crossbar for attaching a Fall protection (series 660), which additionally secures the puller and ensures safe fixing during work or storage. The 2-jaw universal pullers with quickly adjustable and robust standard jaws are used for particularly safe Pulling of bearings, gears and discs in all common sizes for trade, workshop and industry. This allows any component to be loosened that sits on a shaft and is freely accessible from the outside. The Soft-Touch knurls guarantee maximum operating convenience even with wet or oily hands. By simply turning the jaws over, the pullers can also be used as an internal extractor.

APPLICATION AREA

To detach bearings, gears, and discs in all common sizes for crafts, workshops, and industry.

BENEFIT

- Simple, manual solution of the Jaw clamps using hand knobs (Quick Adjust Technology)
- Optimized quick adjustment form guarantees an exceptionally good haptics (even with wet or oily hands)
- Application also for eccentric components via freely movable pulling jaws gliding on the crossbar.
- Hexagonal profile on the crossbar for secure counterholding
- Quick-adjustable jaws guarantee immediate adjustment to any spread between 0 mm – 350 mm
- Shear-proof mounting of the claw in the sliding piece (Armlock Technology)
- Safe setup of the spindle with a rotatable spindle tip on smooth surfaces as well as on centerings (Switch Technology)
- The TiN coating of the spindle tip ensures better friction properties.
- Optional convertible from an external puller to an internal extractor by reversing the extraction jaws.
- Anti-slip safety (spindle neck) at the spindle head for safe working with wrench.
- Spindle outlet for thread protection
- Pullers are labeled with technical attributes and manufacturer information (label)

OPERATION

- Position the puller jaws on the part to be removed from the outside
- Slide the jaws under the component
- Use the hand knob for manual attachment of the jaws
- Manually pull the spindle for fixation
- Turn the hexagon on the spindle head with a ratchet or a box wrench until the component is loosened

MASTER DATA

GTIN [GTIN]	4021176041518

Country of origin	DE
Material	Tool steel
Series	20x
Gross weight [kg]	7,52 kg
Package contents	1 piece
Packaging Act	PAPPE PAP 21
Worldwide sales capability	Yes (REACH, RoHS, POP, PROP65, TSCA)

SPARE PARTS

- 20-30-T crossbar for 20-30
- 3-202-Px_Quick Adjustable Standard Jaws (Pair)
- 626300_Mechanical spindle

2-jaw universal puller with quick adjustment jaws, up to 350 mm spread, 200 mm reach

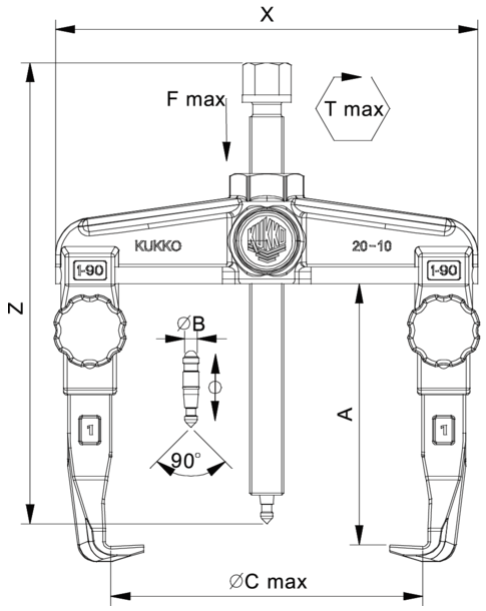

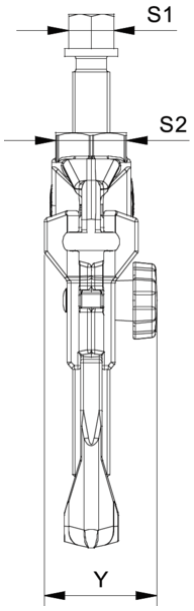

Abbreviation	Attribut	Wert
X	Total width [mm]	420 mm
Y	Total depth [mm]	60 mm
Z	Total height [mm]	337 mm
A	Clamping depth of external puller [mm]	200 mm
S1	Width across flats [mm]	27 mm
S2	Width across flats [mm]	46 mm
Cmin	Span outside pull-off (min.) [mm]	0 mm
Cmax	Span outside pull-off (max.) [mm]	350 mm
K	Hook root thickness at the tip (claw thickness K) [mm]	4 mm
J	Hook base width (claw width J) [mm]	35 mm
O	Hook base depth usable (claw depth usable O) [mm]	32,5 mm
H	Total hook root depth (total claw depth H) [mm]	67 mm
L	Total claw thickness (L+1mm) [mm]: (claw distance to base surface)	20 mm
Emin	Span inside pull-out (min.) [mm]	180 mm
Emax	Span inside pull-out (max.) [mm]	440 mm
Tmax	Max. torque [Nm]	300 Nm
Fmax	Max. tractive force [t]	10.5 t
Fmax	Max. tensile force [kN]	105 kN

Abbreviation	Attribut	Wert
X	Total width [mm]	420 mm
Y	Total depth [mm]	60 mm
Z	Total height [mm]	337 mm
A	Clamping depth of external puller [mm]	200 mm
S1	Width across flats [mm]	27 mm
S2	Width across flats [mm]	46 mm
Cmin	Span outside pull-off (min.) [mm]	0 mm
Cmax	Span outside pull-off (max.) [mm]	350 mm
K	Hook root thickness at the tip (claw thickness K) [mm]	4 mm
J	Hook base width (claw width J) [mm]	35 mm
O	Hook base depth usable (claw depth usable O) [mm]	32,5 mm
H	Total hook root depth (total claw depth H) [mm]	67 mm
L	Total claw thickness (L+1mm) [mm]: (claw distance to base surface)	20 mm
Emin	Span inside pull-out (min.) [mm]	180 mm
Emax	Span inside pull-out (max.) [mm]	440 mm
Tmax	Max. torque [Nm]	300 Nm
Fmax	Max. tractive force [t]	10.5 t
Fmax	Max. tensile force [kN]	105 kN

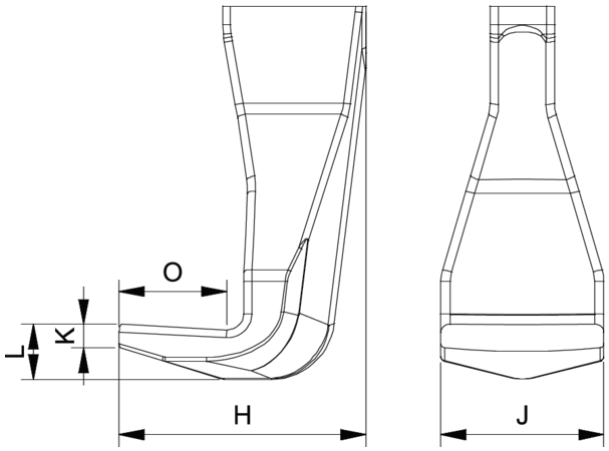

Abbreviation	Attribut	Wert
X	Total width [mm]	420 mm

Y	Total depth [mm]	60 mm
Z	Total height [mm]	337 mm
A	Clamping depth of external puller [mm]	200 mm
S1	Width across flats [mm]	27 mm
S2	Width across flats [mm]	46 mm
Cmin	Span outside pull-off (min.) [mm]	0 mm
Cmax	Span outside pull-off (max.) [mm]	350 mm
K	Hook root thickness at the tip (claw thickness K) [mm]	4 mm
J	Hook base width (claw width J) [mm]	35 mm
O	Hook base depth usable (claw depth usable O) [mm]	32,5 mm
H	Total hook root depth (total claw depth H) [mm]	67 mm
L	Total claw thickness (L+1mm) [mm]: (claw distance to base surface)	20 mm
Emin	Span inside pull-out (min.) [mm]	180 mm
Emax	Span inside pull-out (max.) [mm]	440 mm
Tmax	Max. torque [Nm]	300 Nm
Fmax	Max. tractive force [t]	10.5 t
Fmax	Max. tensile force [kN]	105 kN

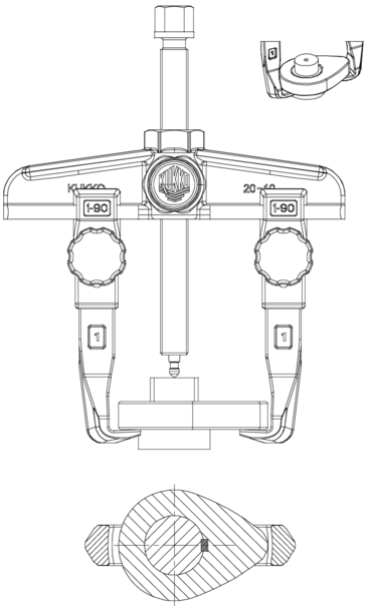

Abbreviation	Attribut	Wert
X	Total width [mm]	420 mm
Y	Total depth [mm]	60 mm
Z	Total height [mm]	337 mm
A	Clamping depth of external puller [mm]	200 mm
S1	Width across flats [mm]	27 mm
S2	Width across flats [mm]	46 mm
Cmin	Span outside pull-off (min.) [mm]	0 mm
Cmax	Span outside pull-off (max.) [mm]	350 mm
K	Hook root thickness at the tip (claw thickness K) [mm]	4 mm
J	Hook base width (claw width J) [mm]	35 mm
O	Hook base depth usable (claw depth usable O) [mm]	32,5 mm
H	Total hook root depth (total claw depth H) [mm]	67 mm
L	Total claw thickness (L+1mm) [mm]: (claw distance to base surface)	20 mm
Emin	Span inside pull-out (min.) [mm]	180 mm
Emax	Span inside pull-out (max.) [mm]	440 mm
Tmax	Max. torque [Nm]	300 Nm
Fmax	Max. tractive force [t]	10.5 t
Fmax	Max. tensile force [kN]	105 kN