Manometer G1/8 0-12 bar | Mondolfo Ferro 3-00488

Mondolfo Ferro Aquila AS 905 · 2020 · Tekening 17 · positie 4

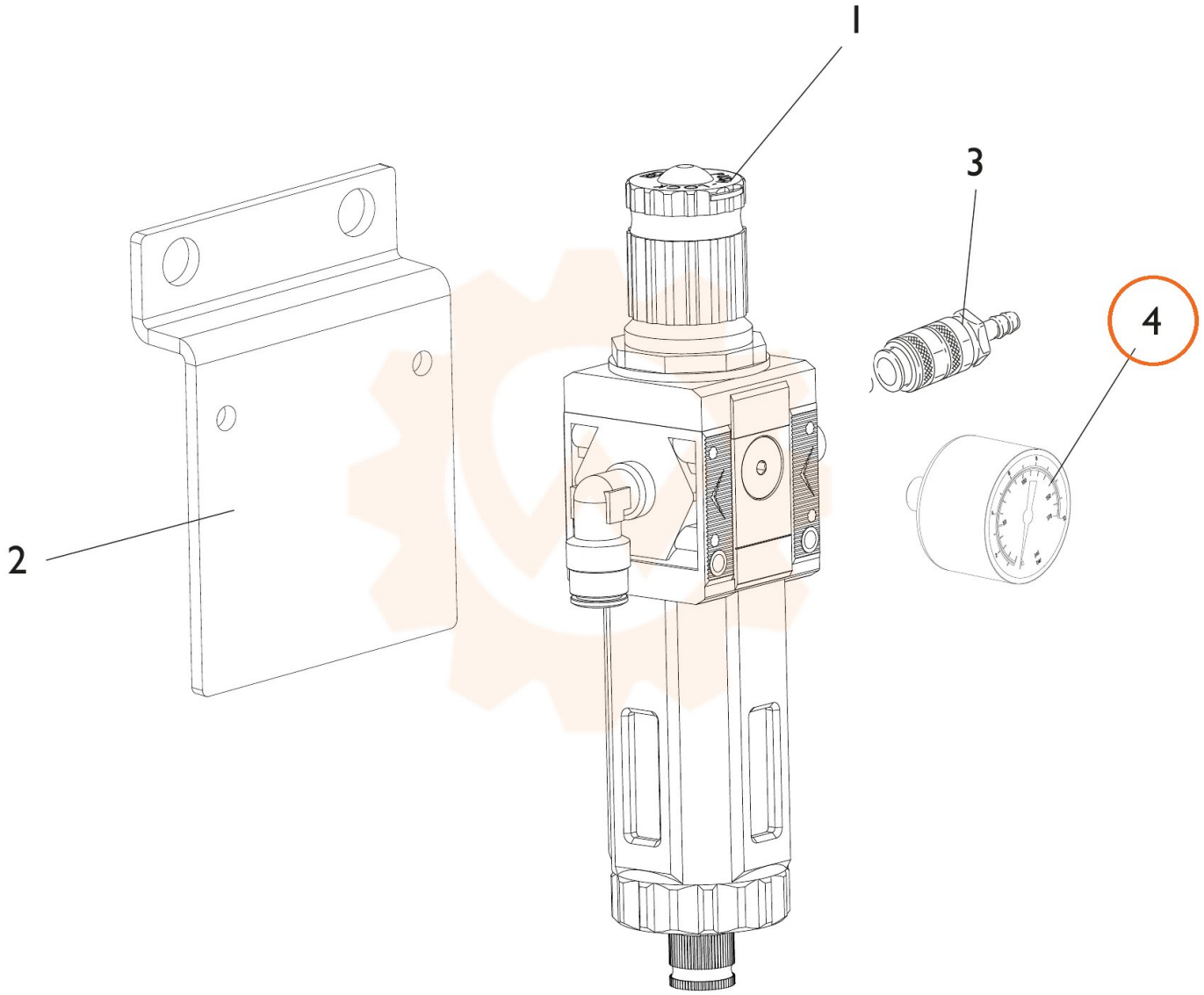
1
2
3
4