22-4 Counter stay, up to 240 mm spread, 200 mm reach



DESCRIPTION

The supports of the series 22 are used together with the internal extractors of the series 21 in crafts, industry, and workshops. Supports are particularly well suited for large cylinder bushings and ball bearings, etc., thanks to the ribbed shape of the support feet, and ensure a firm stand during extraction. In this way, the gentle extraction of internal components is improved. Unlike a sliding hammer, a counter stay allows for more precise work with greater force.

APPLICATION AREA

Together with internal extractors of series 21 in craft, industry, and workshop.

BENEFIT

- Sizes from 21-2 are particularly low-friction due to integrated pressure bearings in the form.
- The friction resistance of the counter nut is minimized by an integrated pressure bearing.

OPERATION

- Determine the internal diameter of the Ball bearing and select a suitable Internal extractor
- Insert the Internal extractor into the bore and tighten the clamping nut
- Support the Counter stay on the housing and screw it onto the wedge spindle of the Internal extractor
- Hold the handle of the Counterstays and pull out the bearing safely by tightening the hexagon nut
- Retighten the clamping nut when pulling out

APPLICATION IMAGE



MASTER DATA

GTIN [GTIN]	4021176112478
Country of origin	DE
Material	Tool steel
Series	22
Gross weight [kg]	4,01 kg
Package contents	1 piece
Packaging Act	PAPPE PAP 21
Worldwide sales capability	Yes (REACH, RoHS, POP, PROP65, TSCA)

SPARE PARTS

- 022401_Support pin with foot
- 022406_spindle
- 22-4-T_Crossbar

Counter stay, up to 240 mm spread, 200 mm reach

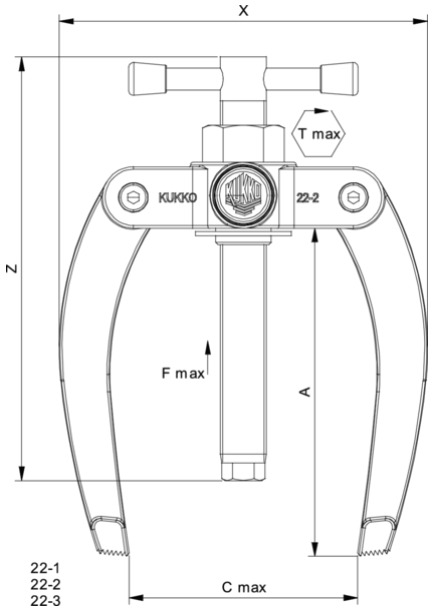

Abbreviation	Attribut	Wert
X	Total width [mm]	282 mm
Y	Total depth [mm]	50 mm
S1	Width across flats [mm]	32 mm
Fmax	Max. tractive force [t]	7 t
Fmax	Max. tensile force [kN]	70 kN
A	Clamping depth [mm]	200 mm
T1	External thread of the spindle [mm]	G 1/2
T2	Internal thread of the spindle [mm]	-

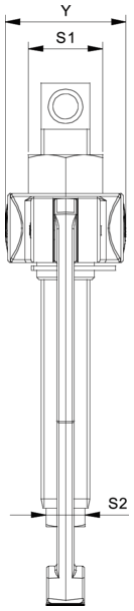

Abbreviation	Attribut	Wert
X	Total width [mm]	282 mm
Y	Total depth [mm]	50 mm
S1	Width across flats [mm]	32 mm
Fmax	Max. tractive force [t]	7 t
Fmax	Max. tensile force [kN]	70 kN
A	Clamping depth [mm]	200 mm
T1	External thread of the spindle [mm]	G 1/2
T2	Internal thread of the spindle [mm]	-

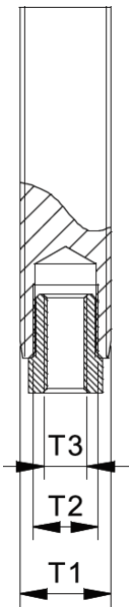

Abbreviation	Attribut	Wert
X	Total width [mm]	282 mm
Y	Total depth [mm]	50 mm
S1	Width across flats [mm]	32 mm
Fmax	Max. tractive force [t]	7 t
Fmax	Max. tensile force [kN]	70 kN

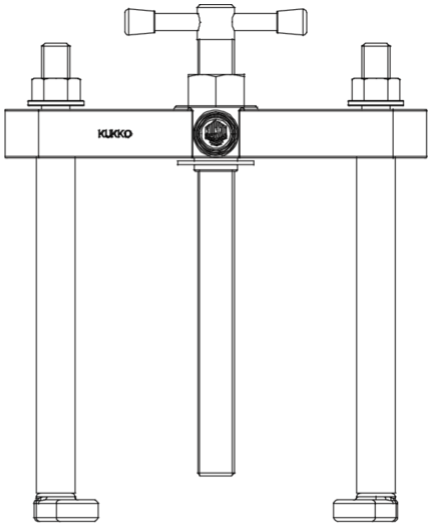

22-4
22-5

Abbreviation	Attribut	Wert
X	Total width [mm]	282 mm
Y	Total depth [mm]	50 mm
S1	Width across flats [mm]	32 mm
Fmax	Max. tractive force [t]	7 t
Fmax	Max. tensile force [kN]	70 kN

A	Clamping depth [mm]	200 mm
T1	External thread of the spindle [mm]	G 1/2
T2	Internal thread of the spindle [mm]	-

A	Clamping depth [mm]	200 mm
T1	External thread of the spindle [mm]	G 1/2
T2	Internal thread of the spindle [mm]	-

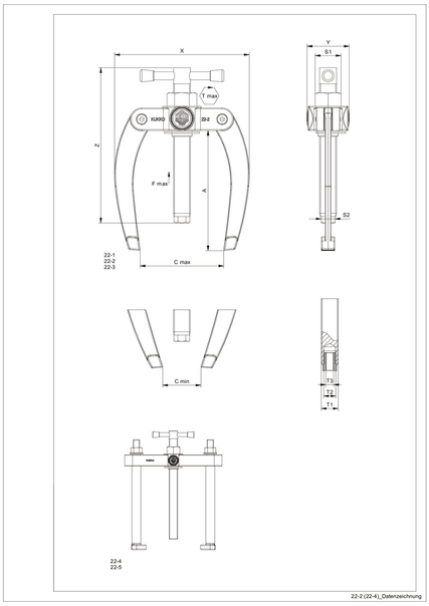

Abbreviation	Attribut	Wert
X	Total width [mm]	282 mm
Y	Total depth [mm]	50 mm
S1	Width across flats [mm]	32 mm
Fmax	Max. tractive force [t]	7 t
Fmax	Max. tensile force [kN]	70 kN
A	Clamping depth [mm]	200 mm
T1	External thread of the spindle [mm]	G 1/2
T2	Internal thread of the spindle [mm]	-